DOCUMENT DATA FORM **Your Name: Nick Carino**

Document Title or Description (max. 254 characters): Circle: Same as cover (or fill in below)

'Column Drawing book 10 schedule and details - below grade

Include work order no. and floor no. if applicable

Roll # DB02	Doc. ID (report #, dwg. #):	
Document Date: 1969	**Document Author Name:**	**Author Organization:**

KEYWORDS – HIGHLIGHT ALL THAT APPLY

Level 1

Bankers Trust	Project 4	(WTC 1 - North Tower)	Add
Below Grade	Project 5	WTC 2 - South Tower	
Concourse	Project 6	WTC 3 - Marriot Hotel	
Electrical Substation	Project 7	WTC 4 - South Plaza Bldg.	
Liberty Plaza	Project 8	WTC 5 - North Plaza Bldg	
PATH Station	WFC 1 - Oppenhiemer Dow	WTC 6 - Customs House	
PATH Terminal	WFC 2 - Tower B	WTC 7	
Project 1	WFC 3 - American Express	WTC Complex	
Project 2	WFC 4 - Tower D	WTC Plaza	
Project 3			

Level 2

Accident analysis & risk	Fire protection	Misc. Performance Problems	(Structural)
Architectural	Fire service	News coverage	Tenant alterations
Data request	Landscaping	Police	Tenant Space
Emergency management	Management	Security	Add
Evacuation	Mech./elec.		

Level 3

1993 explosion	Cranes	Frame	Roof	Weight
A/E fitout	Criteria	Frame analysis	Safety	Weld detail
A-242	Dampers	Frequency	Schedule	Weld size
A-36	Debris	Fuel	Sculpture	Welding
A-497	Deck	Furniture layout	Security system	Wind
Aircraft impact	Deflection	Generators	Shear knuckle	Windows
Air cooled condensers	Demolition	Guidelines	Shear test	Yield strength
Analysis	Design	Gypsum board	Shear Stud	Add
Angles	(Detailing)	Hat truss	Shop drawings	
Antenna	Doors	Human comfort	Shortening	drawing books
Artifacts	Drawings	HVAC	Slab	
Asbestos	Eastern States Steel	Index	Slurry wall	
Base plate	Egress	Inspection	Smoke control	
Beams	Elevator	Insulation	Smoke test	
Bid documents	Elevator Shaft	Job number	Spandrel beam	
Bid Invitation	Emergency communications	Joist	Specifications	
Bow tie	Equipment	L-50	Splices	
Bracing	Erection marks	Lighting	Sprinkler	
Bridging truss	Errors & Omissions	Loads	Stability	
Building code	Escalator	Maintenance	Stairways	
Calculations	Expansion joint	Marking	Standards	
Carpet	Exterior columns	Mesh reinforcement	Steel	
Ceilings	Fabrication	Mill inspection	Steel composition	
Certification	Family member	Model	Stiffness	
Chillers	Field survey	Mullion	Structural review	
Cladding	Fire alarms	Operations	Surveillance	
Collapse	Fireproofing	Paint	Survey	
(Columns)	Fire spread	Partition layout	Survivor	
Communication systems	Fire testing	Partitions	Tenant list	
Composite truss	Firetower	Photos	Tenant occupancy	
Computer output	Flag Pole	Pipes	Testing	
Computer program	Flammability	Plumbing	Tie	
Concrete	Floor	Prestressing	Tolerances	
Connections	Floor load	Probability, uncertainty	Transfer Girders	
Construction	Floor slab	Quality control	Triad	
Contract	Floor system	Ramp	Truss	
Core beams	Floor trusses	Reinforcing (strengthening)	Vestibule	
Core columns	Formwork	Renovation	Vibration	
Corrosion	Foundations	Repair	Walls	
Cracking	Fracture	Research & Development	Water supply	
			Weather	

BOOK 10

COLUMN

SCHEDULE

SKILLING - HELLE - CHRISTIANSEN - ROBERTSON Structural & Civil Engineers

PROJECT	TITLE	DATE
THE WORLD TRADE CENTER	DRAWING INDEX	5/15/67

REVISIONS

5-26-67
10-20-67
1- 5-68
2- 9-68
3-13-68
4- 5-68
4-26-68
5- 1-68
6- 3-68
6- 7-68
6-11-68
6-28-68
8- 9-68
9-20-68
10-15-68
11- 5-68
12- 3-68
12-17-68
1- 3-69
1- 6-69
1-13-69
1-17-69
2- 3-69
2- 4-69
3- 1-69
3- 3-69
3-12-69

LICENSED PROFESSIONAL ENGINEER LESLIE E. ROBERTSON UNIVERSITY

3-21-69
4- 1-69
5-1-69

DRAWING NO.

BOOK 10	TITLE
10-JK1-0	Drawing Index
10-J1-1	Notes on Column, Base Plates & Shear Heads
10-J1-2 thru 29, 31, 32, 33, 35 thru 81, 83 thru 95, 97, 99	Column Schedule and Base Plates (Zone J)
10-K1-201 thru 223, 225 thru 262, 264 thru 272, 274 thru 276A, 278, 279	Column Schedule and Base Plates (Zone K)
10-JK2-2 thru 5	Typical Column Details
10-JK2-7 thru 10	Typical Column Details
10-JK2-12 thru 17	Typical Column Details
10-JK2-30 & 31A	Typical Detail of Temporary Column Cap for Construction Crane Support
10-JK2-31	Typical Detail of Column Sitting on Top of Girder
10-JK2-32	Detail of Column Cap over Columns K31-4, K35-3 & K37-3
10-JK2-33	Hanger Detail
10-JK2-34	Detail of Column J8-6
10-JK2-35	Column Details
10-JK2-35A, 35B, 35C, 36 thru 42	Column Splice Details
10-JK3-2	Typical Detail of Column Base Plate
10-JK3-2A	Detail of Column Base Plate J3-14
10-JK3-2B	Colucn Base Plate Detail at Truck Ramps
10-JK3-2C	Typical Column Base Plate Detail under Box Section Column
10-JK3-2D	Typical Detail of Column Base Plates (with ** as shown on plans)
10-JK3-2E	Detail of Column Base Plate M42-3
10-JK3-2F	Detail of Column Base M48-5
10-JK3-3, 3A, 3B & 3C	Column Base Plate Schedule at Fl. 310'
10-JK3-4 thru 10	Column Base Plate Detail at Fl. 310'
10-JK4-3	Typical Column Shear - Head Details at Fl. 264'
10-JK4-4	Typical Column Shear - Head Details at Fl. 264'
10-JK4-4B	Column Splice Detail
10-JK4-5	Column Shear - Head Detail - Type V, W, X
10-JK4-6	Column Shear - Head Detail - Type Y
10-JK4-7, 8 & 9	Shear Head Details
10-JK4-10	Detail of Column Bosom Plates - Types A, B, C, D, E, F, G
10-JK4-10A, 10B, 10C, 10D, 10E, 10F, 10G, 10H	Detail of Column Bosom Plates - Type H
10-JK4-11A, 12, 15, 16, 29 and 30	Detail of Column Bosom Plates - Type J

119

10-JK1-0

WORTHINGTON, SKILLING, HELLE & JACKSON — Civil & Structural Engineers

PROJECT THE WORLD TRADE CENTER | TITLE NOTES ON COLUMN, BASE PLATES & SHEAR HEADS | DATE 5-15-67

REVISIONS

5-26-67
10-20-67
11-8-67

NOTES:

A. Columns

1. Material for all columns shall be A-36 steel except as noted.

2. See 10-JK2 for location and detail of column splices.

B. Column Base-plates

1. Material for all base plates shall be A-36 steel except as noted

2. All thickness shown are finished thickness.

3. Provide (2-1"Φ) 4" anchor bolts and proper nuts & washers per base ℄. See detail on 10-JK3-2.

C. Column Shear-Heads

1. Provide shear-head at each level where column supports flat-slab construction (see 10-JK4 for typical detail). Where steel or concrete beams frame to a column, no shear-head is required.

2. Material for shear-heads shall be F_Y=50KSI

D. Column Cap and Bearing Plates

1. All column cap and bearing plates to be 1-1/2" thick, overhang a min. of 1/2" to each side of the column to which they are connected to, except otherwise noted on JK2-30 and 31.

LICENSED PROFESSIONAL ENGINEER
LESLIE E. ROBERTSON
No. 34360
UNIVERSITY OF THE STATE OF NEW YORK

10-J1-1

WORTHINGTON, SKILLING, HELLE & JACKSON — Civil & Structural Engineers

PROJECT THE WORLD TRADE CENTER | TITLE COLUMN SCHEDULE | DATE 5-15-67

REVISIONS
2-9-68
4-5-68

	J1-1	J1-2	J1-3	J1-4	J1-5	J1-6	J1-7
El. 332'							
El. 310'							
level							
El. 294'							
El. 284'	14 WF 61 (Fy=42)	14 WF 87 (Fy=50)	14 WF 87 (Fy=50)	14 WF 87 (Fy=50)	14 WF 87 (Fy=42)		
El. 274'							
El. 264'	14 WF 111 (Fy=50)	14 WF 150 (Fy=50)	14 WF 184 (Fy=50)	14 WF 184 (Fy=50)	14 WF 150 (Fy=50)	TRUSS JT-2 above See dwg. 11-J1-3	
El. 253	▲ 14 WF 111 (Fy=50)	▲ 14 WF 150 (Fy=50)	▲ 14 WF 184 (Fy=50)	▲ 14 WF 184 (Fy=50)	▲ 14 WF 150 (Fy=50)	14 WF 314 (Fy=50)	14 WF 95 (Fy=50)
Top of base Pl	El. 249'	El. 249'	El. 249'	El. 249'	El. 249'	El. 249'	El. 243'-6"
Base Plate	25 × 2 × 2'-2"	30 × 2 5/8 × 2'-8"	33 × 3 × 2'-11"	33 × 3 × 2'-11"	30 × 2 5/8 × 2'-8"	45 × 4 5/8 × 4'-0"	26 × 2 1/8 × 2'-3"

✱ Provide proper splice pls., bolt holes & finished col. top for future columns. Use upper col. one size smaller except as shown.
▲ See detail on 10-JK4-3 and 4.
■ Splice 3" above slab. See note on 10-JK2-2.
● See detail on 10-JK2-3C.

10-J1-2

LICENSED PROFESSIONAL ENGINEER LESLIE E. ROBERTSON No. 34360 UNIVERSITY OF THE STATE OF NEW YORK

WORTHINGTON, SKILLING, HELLE & JACKSON Civil & Structural Engineers

PROJECT THE WORLD TRADE CENTER | TITLE COLUMN SCHEDULE | DATE 5-15-67

REVISIONS
2-9-68
5-1-68

	J1-8			J1-11			
El. 332'							
El. 294'							
El. 284'							
El. 274'							
El. 264'							
El. 253	14 WF 246 (Fy=50)						
Top of base Pl	El. 243'-6"			El. 241'			
Base Plate	42 × 4⅝ × 3'-8"			27 × 2'-0 × 2'-3"			

LICENSED PROFESSIONAL ENGINEER
LESLIE E. ROBERTSON
No. 34360
UNIVERSITY OF THE STATE OF NEW YORK

* Provide proper splice pls., bolt holes & finished col. top for future columns. Use upper col. one size smaller except as shown.
▲ See detail on 10-JK4-3 and 4.
■ Splice 3" above slab. See note on 10-JK2-2.
● See detail on 10-JK2-30.

10-J1-3

WORTHINGTON, SKILLING, HELLE & JACKSON — Civil & Structural Engineers

PROJECT: THE WORLD TRADE CENTER | TITLE: COLUMN SCHEDULE | DATE: 5-15-67

REVISIONS
5-1-68
6-7-68

	J1-13	J1-13A	J1-14	J1-15	J1-16		
El. 332'							
El. 310'							
EL 290'	Part of Truss J1-4		℄ Girder See dwg.	10WF49 (Fy=42)	Top of Base ℄ El. 289'-10" See det. on 10-JK3-2B	10WF49 (Fy=42)	
El. 274'			14WF426 (Fy=50)				
El. 264'							
Top of base ℄	14WF264 (Fy=50) El. 241'	8WF40 (Fy=42) El. 241'	14WF426 (Fy=50) ▲ El. 243'-6"				
Base Plate	49 × 5⅝ × 4'-3"	17 × ½ × 1'-7"	56 × 6½ × 5'-0"	16 × 1⅞ × 1'-8"	16 × 1⅞ × 1'-8"		

* Provide proper splice pls., bolt holes & finished col. top for future columns. Use upper col. one size smaller except as shown.
▲ See detail on 10-JK4-3 and 4..
■ Splice 3" above slab. See note on 10-JK2-2.
● See detail on 10-JK2-30.

10-J1-4

LICENSED PROFESSIONAL ENGINEER LESLIE E. ROBERTSON No. 042866 UNIVERSITY OF THE STATE OF NEW YORK

B

WORTHINGTON, SKILLING, HELLE & JACKSON Civil & Structural Engineers

PROJECT THE WORLD TRADE CENTER | TITLE COLUMN SCHEDULE | DATE 5-15-67

REVISIONS
2-9-68
4-5-68

	J2-1	J2-2	J2-3	J2-4	J2-5	J2-6	J2-7
El. 332'							
El. 310'				* 14 WF 95 (Fy=50)	*	*	*
Street level				El. 301'-11"			14 WF 136 (Fy=50)
El. 294'			14 WF 127 (Fy=50)		14 WF 136 (Fy=50)	14 WF 150 (Fy=50)	
El. 284'	14 WF 61 (Fy=42)	14 WF 87 (Fy=42)					TRUSS JT-2 See dwg. M-JJ-3
El. 274'							
El. 264'	14 WF 103 (Fy=50)	14 WF 142 (Fy=50)	14 WF 246 (Fy=50)		14 WF 264 (Fy=50)	14 WF 287 (Fy=50)	
El. 253	▲ 14 WF 103 (Fy=50)	▲ 14 WF 142 (Fy=50)	▲ 14 WF 246 (Fy=50)		14 WF 264 (Fy=50)	14 WF 287 (Fy=50)	14 WF 142 (Fy=50)
Top of base Pl	El. 249'	El. 249'	El. 249'		El. 249'	El. 249'	El. 243'-6"
Base Plate	22 × 1⅝ × 2'-0"	28 × 2⅜ × 2'-6"	41 × 4⅛ × 3'-8"		41 × 4 × 3'-8"	43 × 4¾ × 3'-9"	33 × 3⅛ × 3'-0"

* Provide proper splice pls., bolt holes & finished col. top for future columns. Use upper col. one size smaller except as shown.
▲ See detail on 10-JK4-3 and 4.
■ Splice 3" above slab. See note on 10-JK2-2.
● See detail on 10-JK2-30.

10-JI-5

LICENSED PROFESSIONAL ENGINEER LESLIE E. ROBERTSON No. 34360 UNIVERSITY OF THE STATE OF NEW YORK

WORTHINGTON, SKILLING, HELLE & JACKSON — Civil & Structural Engineers

PROJECT: THE WORLD TRADE CENTER | TITLE: COLUMN SCHEDULE | DATE: 5-15-67

REVISIONS
2-9-68

	J2-8	J2-9	J2-10	J2-11	J2-12	J2-13	J2-14
El. 332'							
El. 310'	*	*	*	*	*	*	*
El. 294'	14WF176 (Fy=50)	14WF176 (Fy=42)	14WF176 (Fy=50)	14WF167 (Fy=50)	14WF167 (Fy=50)	14WF167 (Fy=50)	14WF167 (Fy=50)
El. 284'							
El. 274'	14WF193 (Fy=50)	14WF342 (Fy=50)	14WF342 (Fy=50)	14WF342 (Fy=50)	14WF342 (Fy=50)	14WF342 (Fy=50)	14WF193 (Fy=50)
El. 264'							
El. 253		▲ 14WF342 (Fy=50)	▲ 14WF342 (Fy=50)	▲ 14WF342 (Fy=50)	▲ 14WF342 (Fy=50)	▲ 14WF342 (Fy=50)	
Top of base Pl		El. 243'-6"	El. 243'-6"	El. 243'-6"	El. 243'-6"	El. 243'-6"	
Base Plate		45 × 5 × 4'-1"	45 × 5 × 4'-1"	45 × 5 × 4'-1"	45 × 5 × 4'-1"	45 × 5 × 4'-1"	

LICENSED PROFESSIONAL ENGINEER — LESLIE E. ROBERTSON — No. 34360 — UNIVERSITY OF THE STATE OF NEW YORK

* Provide proper splice pls., bolt holes & finished col. top for future columns. Use upper col. one size smaller except as shown.
▲ See detail on 10-JK4-3 and 4.
■ Splice 3" above slab. See note on 10-JK2-2.
● See detail on 10-JK2-30.

10-J1-6

WORTHINGTON, SKILLING, HELLE & JACKSON — Civil & Structural Engineers

PROJECT: THE WORLD TRADE CENTER | TITLE: COLUMN SCHEDULE | DATE: 5-15-67

REVISIONS
2-9-68
5-1-68
6-7-68

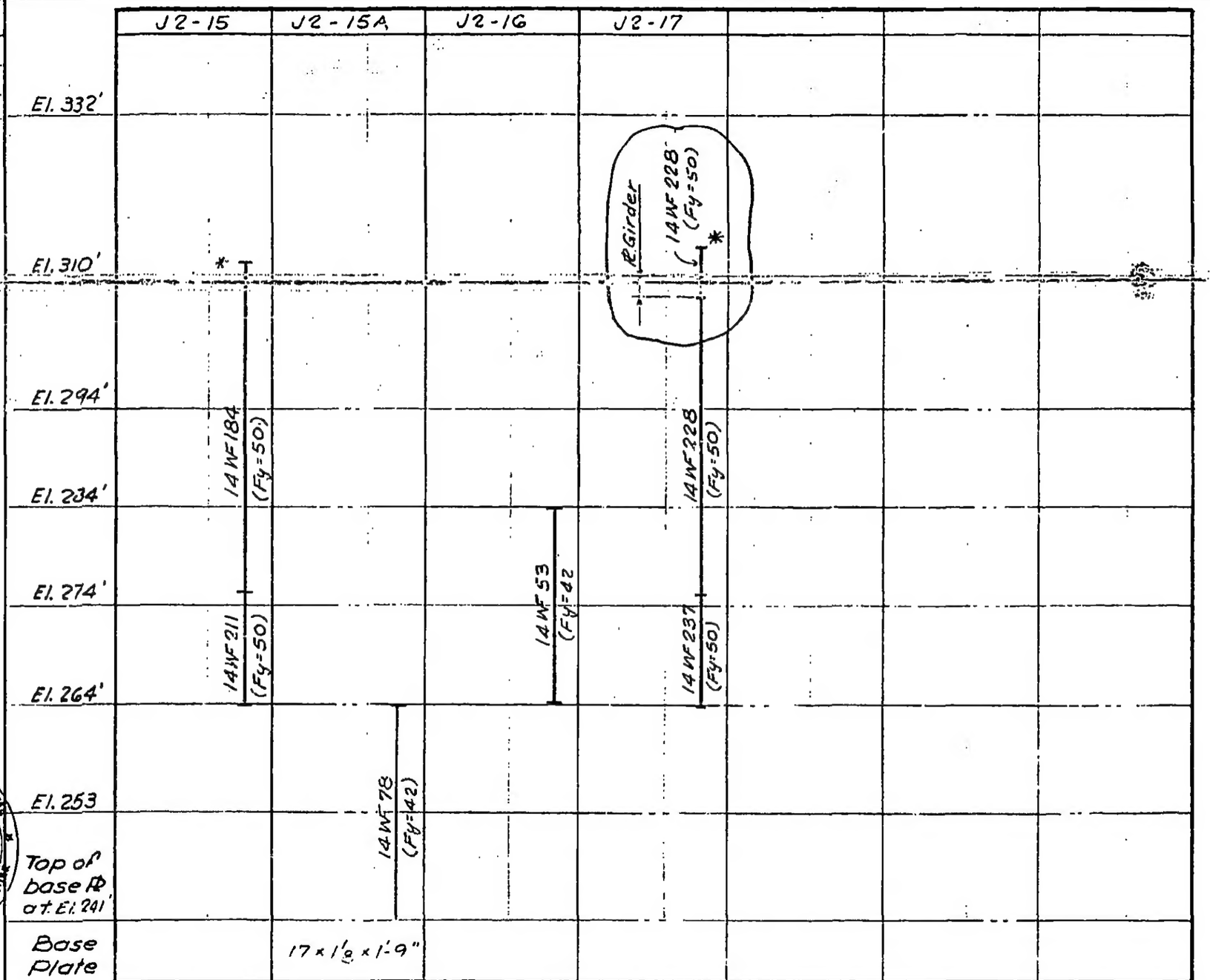

* Provide proper splice pls., bolt holes & finished col. top for future columns. Use upper col. one size smaller except as shown.
▲ See detail on 10-JK4-3 and 4.
■ Splice 3" above slab. See note on 10-JK2-2.
● See detail on 10-JK2-30.

10-J1-7

LESLIE E. ROBERTSON PROFESSIONAL ENGINEER No. 34360 UNIVERSITY OF THE STATE OF NEW YORK

WORTHINGTON, SKILLING, HELLE & JACKSON — Civil & Structural Engineers

PROJECT: THE WORLD TRADE CENTER | TITLE: COLUMN SCHEDULE | DATE: 5-15-67

REVISIONS
5-1-68
9-4-68

	J2-18	J2-20	J2-22	J2-23	J2-23A	J2-24	J2-25
El. 332'							
El. 310'	Top of Girder			Top of ℄ Girder			
El. 290'	14WF127 (Fy=50)	14WF228 (Fy=50)		℄ Girder 14WF264 (Fy=50)	Top of Girder 14WF150 (Fy=50)		14WF150 (Fy=50)
El. 271'	Port of Truss JK4			14WF264 (Fy=50)		14WF127 (Fy=50)	
El. 264'			14WF87 (Fy=42)	14WF455 (Fy=50)		14WF314 (Fy=50)	14WF314 (Fy=50)
Top of base ℄			▲ 14WF87 (Fy=42) El.241'	▲ 14WF455 (Fy=50) El.246'		▲ 14WF314 (Fy=50) El.249'	▲ 14WF314 (Fy=50) El.249'
Base Plate			24x2'8x2'-0"	55x6'2x5'-0"		45x4'8x4'-0"	45x4'9x4'-0"

✱ Provide proper splice pls., bolt holes & finished col. top for future columns. Use upper col. one size smaller except as shown.
▲ See detail on 10-JK4-3 and 4..
■ Splice 3" above slab. See note on 10-JK2-2.
● See detail on 10-JK2-30.

10-J1-8

LICENSED PROFESSIONAL ENGINEER LESLIE E. ROBERTSON No. 54300 UNIVERSITY OF THE STATE OF NEW YORK

B

WORTHINGTON, SKILLING, HELLE & JACKSON — Civil & Structural Engineers

PROJECT: THE WORLD TRADE CENTER | TITLE: COLUMN SCHEDULE | DATE: 5-15-67

REVISIONS

11-5-68

J2-23B

El. 332'

El. 310'

14WF78 (Fy=50) *

Top of girder

El. 290'

El. 274'

El. 264'

Top of base Pl at El. 241'

Base Plate

* Provide proper splice pls., bolt holes & finished col. top for future columns. Use upper col. one size smaller except as shown.
▲ See detail on 10-JK4-3 and 4..
■ Splice 3" above slab. See note on 10-JK2-2.
● See detail on 10-JK2-30.

10-J1-9

LICENSED PROFESSIONAL ENGINEER — LESLIE E. ROBERTSON — No. 34360 — UNIVERSITY OF THE STATE OF NEW YORK

B

WORTHINGTON, SKILLING, HELLE & JACKSON — Civil & Structural Engineers

PROJECT: THE WORLD TRADE CENTER | TITLE: COLUMN SCHEDULE | DATE: 5-15-67

REVISIONS
2-9-68
6-7-68
9-20-68

	J2-51	J2-52	J2-53	J2-54	J2-55	J2-56	J2-57
El. 332'							
El. 310'			14 WF 78 (Fy=42) *				
Street level			Top of Girder				
El. 294'							
El. 284'	14 WF 74 (Fy=42)	14 WF 43 (Fy=42)					
El. 274'							
El. 264'	14 WF 142 (Fy=50)	14 WF 84 (Fy=50)					
El. 253	14 WF 142 (Fy=50) ▲	14 WF 84 (Fy=50) ▲		14 WF 211 (Fy=50)	14 WF 342 (Fy=50)	14 WF 78 (Fy=42)	14 WF 119 (Fy=50)
Top of base Pl	El. 249'	El. 249'		El. 243'-6"	El. 243'-6"	El. 243'-6"	El. 243'-6"
Base Plate	28 × 2 3/8 × 2'-6"	18 × 1 1/4 × 1'-10"		39 × 4 × 3'-6"	49 × 5 5/8 × 4'-5"	17 × 1 1/2 × 1'-9"	28 × 2 3/8 × 2'-6"

* Provide proper splice pls., bolt holes & finished col. top for future columns. Use upper col. one size smaller except as shown.
▲ See detail on 10-JK4-3 and 4.
■ Splice 3" above slab. See note on 10-JK2-2.
● See detail on 10-JK2-30.

10-JJ-10

LICENSED PROFESSIONAL ENGINEER — LESLIE E. ROBERTSON — No. 34360 — UNIVERSITY OF THE STATE OF NEW YORK

A

WORTHINGTON, SKILLING, HELLE & JACKSON Civil & Structural Engineers

PROJECT THE WORLD TRADE CENTER | TITLE COLUMN SCHEDULE | DATE 5-15-67

REVISIONS
5-1-68
9-4-68
9-20-68

	J2-59	J2-60
El. 332'		
El. 310'		(*) 14 WF 78 (Fy = 50)
El. 308'		
El. 294'		Top of Girder J2E
El. 284'		
El. 274'		
El. 264'		
El. 253		14 WF 287 (Fy 50)
Top of base Pl		
El. 203'-6"		
Base Plate	47 × 5 3/8 × 4'-2"	

* Provide proper splice pls., bolt holes & finished col. top for future columns. Use upper col. one size smaller except as shown.
▲ See detail on 10-JK4-3 and 4.
■ Splice 3" above slab. See note on 10-JK2-2.
● See detail on 10-JK2-30.

10-J1-11

LICENSED PROFESSIONAL ENGINEER LESLIE E. ROBERTSON No. 34360 UNIVERSITY OF THE STATE OF NEW YORK

WORTHINGTON, SKILLING, HELLE & JACKSON — Civil & Structural Engineers

PROJECT: THE WORLD TRADE CENTER | TITLE: COLUMN SCHEDULE | DATE: 5-15-67

REVISIONS
2-9-68
4-5-68
5-1-68
6-17-68

	J3-1	J3-2	J3-3	J3-4	J3-5	J3-6	J3-7
El. 332'			Det. 10/4 10-JK2-7	See Detail-1 on 10-JK2-36	10-JK2-17	10-JK2-17	10-JK2-17
El. 310'	*	*		14 WF 287 (Fy=50)			
El. 294'	14 WF 158 (Fy=50)	14 WF 127 (Fy=50)	14 WF 342 (Fy=50)		14 WF 314 (Fy=50)	14 WF 314 (Fy=50)	14 WF 314 (Fy=50)
El. 284'				Truss JT-2 See dwg. 11-J1-3			
El. 274'	14 WF 314 (Fy=50)	14 WF 246 (Fy=50)	14 WF 730 (Fy=46)		14 WF 426 (Fy=50)	14 WF 398 (Fy=50)	14 WF 398 (Fy=50)
El. 264'							
El. 253	▲ 14 WF 314 (Fy=50)	▲ 14 WF 246 (Fy=50)	▲ 14 WF 730 (Fy=46)		14 WF 426 (Fy=50)	▲ 14 WF 398 (Fy=50)	▲ 14 WF 398 (Fy=50)
Top of base ●	El. 249'	El. 249'	El. 244'		El. 241'	El. 241'	El. 241'
Base Plate	45 × 4⅝ × 4'-0"	41 × 4⅛ × 3'-8"	60 × 7¼ × 5'-7"		63 × 7¾ × 5'-7"	62 × 7½ × 5'-6"	62 × 7½ × 5'-6"

* Provide proper splice pls., bolt holes & finished col. top for future columns. Use upper col. one size smaller except as shown.
▲ See detail on 10-JK4-3 and 4.
■ Splice 3" above slab. See note on 10-JK2-2.
● See detail on 10-JK2-30.

10-J1-12

LICENSED PROFESSIONAL ENGINEER — LESLIE E. ROBERTSON — No. 34360 — UNIVERSITY OF THE STATE OF NEW YORK

A

WORTHINGTON, SKILLING, HELLE & JACKSON — Civil & Structural Engineers

PROJECT: THE WORLD TRADE CENTER | TITLE: COLUMN SCHEDULE | DATE: 5-15-67

REVISIONS
2-9-68
2-29-68
4-5-68
5-1-68
6-7-68
6-17-68

	J3-8	J3-9	J3-10	J3-11	J3-12	J3-13	J3-14
El. 332'	10-JK2-17	10-JK2-17	Det. 104 10-JK2-7				
El. 310'				*	*	℄ Girder; 14WF103 (Fy=50) *	
El. 294'	14WF320 (Fy=50)	14WF342 (Fy=50)	Splice, see Det. on 10-JK2-36; 14WF370 (Fy=50)	14WF136 (Fy=50)	14WF136 (Fy=50)	12-JK2-118A; 14WF103 (Fy=50)	
El. 284'			Part of Truss JT-3 See dwg. 11-JI-4				Truss JT-4
El. 274'							
El. 264'	14WF426 (Fy=50) ▲	14WF426 (Fy=50) ▲	14WF53 (Fy=42) See detail on 10-JK2-35	See detail on 12-JK2-52	14WF158 (Fy=50)	See Det. 10-JK2-35	
El. 253	14WF426 (Fy=50) ▲	14WF426 (Fy=50) ▲		14WF287 (Fy=50)			14WF159 (Fy=50)
Top of base ℄	El. 241'	El. 241'		El. 243'-6"			El. 243'-6"
Base Plate	63 × 7¾ × 5'-7"	63 × 7¾ × 5'-7"		43 × 4¾ × 3'-9"			See dwg 10-JK32A

* Provide proper splice pls., bolt holes & finished col. top for future columns. Use upper col. one size smaller except as shown.
▲ See detail on 10-JK4-3 and 4.
■ Splice 3" above slab. See note on 10-JK2-2.
● See detail on 10-JK2-30.

10-JI-13

LICENSED PROFESSIONAL ENGINEER — LESLIE E. ROBERTSON — No. 34360 — UNIVERSITY OF THE STATE OF NEW YORK

A

WORTHINGTON, SKILLING, HELLE & JACKSON — Civil & Structural Engineers

PROJECT: THE WORLD TRADE CENTER | TITLE: COLUMN SCHEDULE | DATE: 5-15-67

REVISIONS

5-1-68
9-4-68
9-20-68
11-5-68

	J3-15A	J3-15	J3-16	J3-18	J3-19	J3-20	J3-21
El. 332'							
El. 310'		See Det. 10-JK2-17; 14WF78 (Fy=50); El. 307-10"; Top of Girder J2A					
El. 290'						14WF193 (Fy=50)	14WF167 (Fy=50)
El. 274'							
El. 264'			14WF87 (Fy=42)	14WF87 (Fy=42)		14WF342 (Fy=50)	14WF342 (Fy=50)
Top of base PL	14WF87 (Fy=42); El. 240'-3"				14WF87 (Fy=42); El. 243'-4"	14WF342 (Fy=50); El. 243'-4"	14WF342 (Fy=50); El. 249'
Base Plate	21 × 1½ × 2'-0"				23 × 1¾ × 2'-1"	49 × 5⅝ × 4'-5"	49 × 5⅝ × 4'-5"

✱ Provide proper splice pls., bolt holes & finished col. top for future columns. Use upper col. one size smaller except as shown.
▲ See detail on 10-JK4-3 and 4..
■ Splice 3" above slab. See note on 10-JK2-2.
● See detail on 10-JK2-30.

LICENSED PROFESSIONAL ENGINEER LESLIE E. ROBERTSON NO. 54850 UNIVERSITY OF THE STATE OF NEW YORK

10-31-68

10-J1-14

WORTHINGTON, SKILLING, HELLE & JACKSON Civil & Structural Engineers

PROJECT THE WORLD TRADE CENTER | TITLE COLUMN SCHEDULE | DATE 5-15-67

REVISIONS
2-9-68
4-5-68
5-1-68

	J3-51	J3-52	J3-53	J3-54	J3-55	J3-56	J3-57
El. 332'							
El. 310'							
Offset level							
El. 294'							
El. 284'	14 WF 87 (Fy=50)						14 WF 176 (Fy=50)
El. 274'		14 WF 48 (Fy=42)					
El. 264'	14 WF 176 (Fy=50) ▲	14 WF 87 (Fy=50) ▲	Truss JT-1 See dwg. 11-J1-2	Truss JT-2 See dwg. 11-J1-3	Truss JT-3 See dwg. 11-J1-4		14 WF 342 (Fy=50) ▲
El. 253	14 WF 176 (Fy=50)	14 WF 87 (Fy=50)	14 WF 500 (Fy=50)	14 WF 730 (Fy=46)	14 WF 730 (Fy=46)	14 WF 158 (Fy=50)	14 WF 342 (Fy=50)
Top of base Pl	El. 249'	El. 249'	El. 241'	El. 241'	El. 241'	El. 241'	El. 243'-6"
Base Plate	31 × 2 3/4 × 2'-9"	21 × 1 1/2 × 1'-11"	64 × 8 × 5'-9"	80 × 10 × 7'-3"	80 × 10 × 7'-3"	34 × 3 1/8 × 2'-11"	45 × 5 × 4'-1"

* Provide proper splice pls., bolt holes & finished col. top for future columns. Use upper col. one size smaller except as shown.
▲ See detail on 10-JK4-3 and 4.
■ Splice 3" above slab. See note on 10-JK2-2.
● See detail on 10-JK2-30.

LESLIE E. ROBERTSON LICENSED PROFESSIONAL ENGINEER No. 34360 UNIVERSITY OF THE STATE OF NEW YORK

10-J1-15

WORTHINGTON, SKILLING, HELLE & JACKSON — Civil & Structural Engineers

PROJECT: THE WORLD TRADE CENTER | TITLE: COLUMN SCHEDULE | DATE: 5-15-67

REVISIONS

5-1-68

	J3-58	J3-59
El. 332'		
El. 310'		
El. 290'		
El. 274'		14 WF 193 (Fy: 50)
El. 264'		
Top of base ✱	El. 243'-4" 14 WF 142 (Fy: 50)	El. 240'-3" ▲ 14 WF 193 (Fy: 50)
Base Plate	33 × 3 1/8 × 3'-0"	39 × 3 3/4 × 3'-5"

✱ Provide proper splice pls., bolt holes & finished col. top for future columns. Use upper col. one size smaller except as shown.
▲ See detail on 10-JK4-3 and 4..
■ Splice 3" above slab. See note on 10-JK2-2.
⊖ See detail on 10-JK2-30.

LICENSED PROFESSIONAL ENGINEER LESLIE E. ROBERTSON No. 54260 STATE OF NEW YORK

10-J1-16

WORTHINGTON, SKILLING, HELLE & JACKSON — Civil & Structural Engineers

PROJECT: THE WORLD TRADE CENTER | TITLE: COLUMN SCHEDULE | DATE: 5-15-67

REVISIONS
2-9-68
4-5-68
6-17-68
4-18-69

	J4-1	J4-2	J4-3	J4-4	J4-5	J4-6	J4-7
El. 332'							
El. 310'	*	*	10-JK2-17	USS JT-2 J1-3 / 10-JK2-17	10-JK2-17	10-JK2-17	10-JK2-17
El. 294'			14 WF 264 (Fy=50)	Part of Truss JT-1 See dwg. J1-3 / 14 WF 228 (Fy=50)			
El. 284'	14 WF 142 (Fy=50)	14 WF 127 (Fy=50)	Truss JT-1 See dwg. J1-2.	10-JK2-42 / 14 WF 287 (Fy=50)	14 WF 264 (Fy=50)	14 WF 264 (Fy=50)	14 WF 264 (Fy=50)
El. 274'							
El. 264'	14 WF 287 (Fy=50)	14 WF 264 (Fy=50)		14 WF 370 (Fy=50)	14 WF 370 (Fy=50)	14 WF 370 (Fy=50)	14 WF 370 (Fy=50)
El. 253	▲ 14 WF 287 (Fy=50)	▲ 14 WF 264 (Fy=50)		▲ 14 WF 370 (Fy=50)	▲ 14 WF 370 (Fy=50)	▲ 14 WF 370 (Fy=50)	▲ 14 WF 370 (Fy=50)
Top of base Pl	El. 249'	El. 249'		El. 241'	El. 241'	El. 241'	El. 241'
Base Plate	43 × 4¾ × 3'-9"	41 × 4 × 3'-8"		60 × 7¼ × 5'-3"	60 × 7¼ × 5'-3"	60 × 7¼ × 5'-3"	60 × 7¼ × 5'-3"

* Provide proper splice pls., bolt holes & finished col. top for future columns. Use upper col. one size smaller except as shown.
▲ See detail on 10-JK4-3 and 4.
■ Splice 3" above slab. See note on 10-JK2-2.
⊖ See detail on 10-JK2-30.

LICENSED PROFESSIONAL ENGINEER — LESLIE E. ROBERTSON — No. 34360 — UNIVERSITY OF THE STATE OF NEW YORK

DRAWN S.C.
REVIEWED E.L.

10-J1-17

WORTHINGTON, SKILLING, HELLE & JACKSON — Civil & Structural Engineers

PROJECT: THE WORLD TRADE CENTER | TITLE: COLUMN SCHEDULE | DATE: 5-15-67

REVISIONS
2-9-68
4-5-68
5-1-68
6-17-68

	J4-8	J4-9	J4-10	J4-11	J4-12	J4-12A	J4-13
El. 332'	10-JK2-17	10-JK2-17	10-JK2-17	10-JK2-17	10-JK2-17		10-JK2-17
El. 310'							
El. 294'	14WF264 (Fy=50)	14WF264 (Fy=50)	14WF264 (Fy=50)	14WF314 (Fy=50)	14WF314 (Fy=50)		14WF320 (Fy=50)
El. 284'			Truss JT-3 See dwg-11-4 Splice see 10-JK2-36				
El. 274'	14WF370 (Fy=50)	14WF370 (Fy=50)		14WF426 (Fy=50)	14WF342 (Fy=50)		14WF342 (Fy=50)
El. 264'	14WF370 ▲ (Fy=50)	14WF370 ▲ (Fy=50)	Splice, see Det. 4 10-JK2-36 14WF370 (Fy=50)	14WF426 ▲ (Fy=50)			
El. 253	14WF370 ▲ (Fy=50)	14WF370 ▲ (Fy=50)				14WF426 (Fy=50)	
Top of base Pl	El. 241'	El. 241'	El. 241'	El. 241'		El. 243'-6"	
Base Plate	60 × 7¼ × 5'-3"	60 × 7¼ × 5'-3"	60 × 7¼ × 5'-3"	63 × 7¾ × 5'-7"		56 × 6½ × 5'-0"	

* Provide proper splice pls., bolt holes & finished col. top for future columns. Use upper col. one size smaller except as shown.
▲ See detail on 10-JK4-3 and 4.
■ Splice 3" above slab. See note on 10-JK2-2.
● See detail on 10-JK2-30.

10-J1-18

LICENSED PROFESSIONAL ENGINEER — LESLIE E. ROBERTSON — No. 34360 — UNIVERSITY OF THE STATE OF NEW YORK

A

WORTHINGTON, SKILLING, HELLE & JACKSON Civil & Structural Engineers

PROJECT THE WORLD TRADE CENTER | TITLE COLUMN SCHEDULE | DATE 5-15-67

REVISIONS
5-1-68
6-28-68
4-4-69

	J4-14		J4-16	J4-17		J4-19	J4-20
El. 332'							Bot. of 12 Girder
El. 310'	Part of Truss JT-5		Part of Truss JT-5	14 WF 264 (Fy=50)			14 WF 550 (Fy=50)
El. 290'							
El. 274'	Part of Truss JT-4	14 WF 287 (Fy=50)	Det. 7 10-JK2-36	14 WF 550 (Fy=50)			
El. 264'			14 WF 605 +PL 14x3 (BS) (Fy=46)			14 WF 87 (Fy=42)	14 WF 550 (Fy=50)
Top of base PL	Splice, see Det. 5 10-JK2-36 18x17 I 2 PLS 17x4 1 PL 10x2 1/2 (Fy=50) El. 283'-4"		14 WF 605 ▲ +PL 14x3 (BS) (Fy=46) El. 283'-4"	14 WF 211 (Fy=50) El. 283'-4"			
Base Plate	67 x 8 x 6'-1"		69 x 8 3/4 x 6'-9"	40 x 4 x 3'-7"			

* Provide proper splice pls., bolt holes & finished col. top for future columns. Use upper col. one size smaller except as shown.
▲ See detail on 10-JK4-3 and 4..
■ Splice 3" above slab. See note on 10-JK2-2.
● See detail on 10-JK2-30.

LICENSED PROFESSIONAL ENGINEER LESLIE E. ROBERTSON No. 34360 UNIVERSITY OF THE STATE OF NEW YORK

DRAWN S.C.
REVIEWED E.L.

10-J1-19

B

WORTHINGTON, SKILLING, HELLE & JACKSON Civil & Structural Engineers

PROJECT THE WORLD TRADE CENTER | TITLE COLUMN SCHEDULE | DATE 5-15-67

REVISIONS
5-1-68
6-7-68

	J4-21	J4-22
El. 332'		
El. 313'		
El. 290'		
El. 274'		14 WF 211 (Fy=50)
El. 264'		
Top of base Pl	El. Bott. of Pl Girder 14 WF 550 (Fy=50) El. 243'-4"	14 WF 398 (Fy=50) El. 243'-4"
Base Plate	67 × 8 × 6'-1"	55 × 6½ × 4'-11"

* Provide proper splice pls., bolt holes & finished col. top for future columns. Use upper col. one size smaller except as shown.
▲ See detail on 10-JK4-3 and 4..
■ Splice 3" above slab. See note on 10-JK2-2.
● See detail on 10-JK2-30.

10-J1-20

LICENSED PROFESSIONAL ENGINEER LESLIE E. ROBERTSON No. 34360 UNIVERSITY OF THE STATE OF NEW YORK

B

WORTHINGTON, SKILLING, HELLE & JACKSON Civil & Structural Engineers

PROJECT THE WORLD TRADE CENTER | TITLE COLUMN SCHEDULE | DATE 5-15-67

REVISIONS
2-9-68
2-29-68
5-1-68

	J4-51	J4-52	J4-52A	J4-53	J4-54
El. 332'					
El. 310'					
Street level					
El. 294'					
El. 284'	14 WF 103 (Fy=42)	14 WF 43 (Fy=42)			
El. 274'					
El. 264'	14 WF 202 (Fy=50)	14 WF 87 (Fy=42)			
El. 253	▲ 14 WF 202 (Fy=50)	▲ 14 WF 87 (Fy=42)	14 WF 87 (Fy=50)	14 WF 87 (Fy=50)	14 WF 342 (Fy=50)
Top of base PL	El. 249'	El. 249'	El. 241'	El. 243'-6"	El. 243'-4"
Base Plate	31 × 2¼ × 2'-9"	21 × 1½ × 1'-11"	23 × 1¾ × 2'-1"	23 × 1¾ × 2'-1"	51 × 5⅞ × 4'-7"

* Provide proper splice pls., bolt holes & finished col. top for future columns. Use upper col. one size smaller except as shown.
▲ See detail on 10-JK4-3 and 4.
■ Splice 3" above slab. See note on 10-JK2-2.
● See detail on 10-JK2-30.

10-J1-21

LESLIE E. ROBERTSON REGISTERED PROFESSIONAL ENGINEER No. 34360 UNIVERSITY OF THE STATE OF NEW YORK

A

WORTHINGTON, SKILLING, HELLE & JACKSON — Civil & Structural Engineers

PROJECT: THE WORLD TRADE CENTER | TITLE: COLUMN SCHEDULE | DATE: 5-15-67

REVISIONS
2-9-68
4-5-68
6-17-68

	J5-1		J5-3	J5-4	J5-5	J5-6	J5-7
El. 332'				10-JK2-17	10-JK2-17	10-JK2-17	10-JK2-17
El. 310'	*			14WF314 (Fy=50)			
El. 294'	14WF158 (Fy=50)		14WF87 (Fy=50)		14WF264 (Fy=50)	14WF287 (Fy=50)	14WF314 (Fy=50)
El. 284'				Truss JT-1 See dwg. 11-J1-2			
El. 274'							
El. 264'	14WF314 (Fy=50)		14WF167 (Fy=50)		14WF370 (Fy=50)	14WF370 (Fy=50)	14WF426 (Fy=50)
El. 253	14WF314 ▲ (Fy=50)		14WF167 ▲ (Fy=50)	14WF237 (Fy=50)	14WF370 ▲ (Fy=50)	14WF370 ▲ (Fy=50)	14WF426 ▲ (Fy=50)
Top of base Pl	El. 244'-6"		El. 244'-6"	El. 241'	El. 241'	El. 241'	El. 241'
Base Plate	45 × 4⅝ × 4'-0"		31 × 2¾ × 2'-9"	49 × 5⅝ × 4'-3"	60 × 7¼ × 5'-3"	60 × 7¼ × 5'-3"	63 × 7¾ × 5'-7"

* Provide proper splice pls., bolt holes & finished col. top for future columns. Use upper col. one size smaller except as shown.
▲ See detail on 10-JK4-3 and 4.
■ Splice 3" above slab. See note on 10-JK2-2.
● See detail on 10-JK2-30.

10-J1-22

LESLIE E. ROBERTSON — REGISTERED PROFESSIONAL ENGINEER — No. 34360 — UNIVERSITY OF THE STATE OF NEW YORK

A

WORTHINGTON, SKILLING, HELLE & JACKSON — Civil & Structural Engineers

PROJECT: THE WORLD TRADE CENTER | TITLE: COLUMN SCHEDULE | DATE: 5-15-67

REVISIONS
2-9-68
5-1-68
6-7-68
6-17-68

	J5-8	J5-9	J5-10	J5-11	J5-12	J5-13	J5-14
El. 332' to El. 310'	10-JK2-17	10-JK2-17	10-JK2-17	10-JK2-17	10-JK2-17	10-JK2-17	10-JK2-17
El. 294' to El. 284'	14WF314 (Fy=50)	14WF314 (Fy=50)	14WF314 (Fy=50)	14WF314 (Fy=50)	14WF314 (Fy=50)	14WF320 (Fy=50)	Part of Truss JT-7
El. 274' to El. 264'	14WF398 (Fy=50)	14WF398 (Fy=50)	14WF426 (Fy=50)	14WF426 (Fy=50)	14WF426 (Fy=50)	14WF342 (Fy=50)	14WF550 (Fy=50)
El. 253 ▲	14WF398 (Fy=50)	14WF398 (Fy=50)	14WF426 (Fy=50)	14WF426 (Fy=50)	14WF426 (Fy=50)		14WF550 (Fy=50)
Top of base Pl	El. 241'	El. 241'	El. 241'	El. 241'	El. 241'		El. 243'-4"
Base Plate	G2 × 7½ × 5'-6"	G2 × 7½ × 5'-6"	G3 × 7¾ × 5'-7"	G3 × 7¾ × 5'-7"	G3 × 7¾ × 5'-7"		G3 × 7¾ × 5'-6"

* Provide proper splice pls., bolt holes & finished col. top for future columns. Use upper col. one size smaller except as shown.
▲ See detail on 10-JK4-3 and 4.
■ Splice 3" above slab. See note on 10-JK2-2.
● See detail on 10-JK2-30.

10-J1-23

LESLIE E. ROBERTSON — REGISTERED PROFESSIONAL ENGINEER — No. 34360 — STATE OF NEW YORK

A

WORTHINGTON, SKILLING, HELLE & JACKSON — Civil & Structural Engineers

PROJECT: THE WORLD TRADE CENTER | TITLE: COLUMN SCHEDULE | DATE: 5-15-67

REVISIONS
5-1-68
6-7-68
6-17-68

	J5-15		J5-17	J5-18	J5-19	J5-20	J5-21
El. 332'					10-JK2-77		
El. 310'							
El. 290'					14 WF 500 (Fy=50)		14 WF 237 (Fy=50)
El. 274'	14 WF 158 (Fy=50)		14 WF 142 (Fy=50)		℄ Girder		
El. 264'	14 WF 158 (Fy=50)		14 WF 142 (Fy=50)	Bott. of ℄ Girder See dwg. ▲ 14 WF 370 (Fy=50)	14 WF 61 (Fy=42)	Bott. of ℄ Girder See dwg. ▲ 14 WF 550 (Fy=50)	14 WF 455 (Fy=50)
Top of base ℄	See detail 10-JK4-4B ▲ 14 WF 158 (Fy=50) El. 243'-4"		14 WF 142 ▲ (Fy=50) El. 243'-4"	El. 241'-9"	See detail on 10-JK2-35	El. 241'	14 WF 455 ▲ (Fy=50) El. 241'
Base Plate	35 × 3¼ × 3'-1"		33 × 3⅛ × 3'-0"	53 × 6¼ × 4'-9"		59 × 7 × 5'-5"	55 × 4½ × 5'-0"

* Provide proper splice pls., bolt holes & finished col. top for future columns. Use upper col. one size smaller except as shown.
▲ See detail on 10-JK4-3 and 4..
■ Splice 3" above slab. See note on 10-JK2-2.
● See detail on 10-JK2-30.

10-J1-24

LICENSED PROFESSIONAL ENGINEER — LESLIE E. ROBERTSON — No. 34260 — STATE OF NEW YORK

WORTHINGTON, SKILLING, HELLE & JACKSON Civil & Structural Engineers

PROJECT THE WORLD TRADE CENTER | TITLE COLUMN SCHEDULE | DATE 5-15-67

REVISIONS
2-9-68
5-1-68

	J5-51	J5-52	J5-53	J5-54
El. 332'				
El. 310'				
Street level				
El. 294'				
El. 284'	14 WF 87 (Fy=50)	14 WF 43 (Fy=42)		
El. 274'				
El. 264'	14 WF 176 (Fy=50)	14 WF 87 (Fy=50)		
El. 253	▲ 14 WF 176 (Fy=50)	▲ 14 WF 87 (Fy=50)	14 WF 426 (Fy=50)	Truss JF-7 14 WF 665 (Fy=46)
Top of base Pl	El. 249'	El. 249'	El. 241'	El. 243'-4"
Base Plate	31 × 2 3/4 × 2'-9"	21 × 1 1/2 × 1'-11"	56 × 6 1/2 × 5'-0"	69 × 8 1/2 × 6'-4"

* Provide proper splice pls., bolt holes & finished col. top for future columns. Use upper col. one size smaller except as shown.
▲ See detail on 10-JK4-3 and 4.
■ Splice 3" above slab. See note on 10-JK2-2.
● See detail on 10-JK2-30.

10-J1-25

REGISTERED PROFESSIONAL ENGINEER LESLIE E. ROBERTSON No. 34360 UNIVERSITY OF THE STATE OF NEW YORK

WORTHINGTON, SKILLING, HELLE & JACKSON — Civil & Structural Engineers

PROJECT: THE WORLD TRADE CENTER | TITLE: COLUMN SCHEDULE | DATE: 5-15-67

REVISIONS
5-1-68

	J5-55	J5-56
El. 332'		
El. 310'	Part of Truss J1-6 See dwg.	Part of Truss J1-6 See dwg.
El. 290'		
El. 274'	14 WF 246 (Fy=50)	Temp. bracing 14 WF 455 (Fy=50)
El. 264'		
Top of base Pl.	▲ 14 WF 246 (Fy=50) El 243'-4"	See detail 10-JK4-4B ▲ 14 WF 455 (Fy=50) El 243'-4"
Base Plate	41 x 4 1/8 x 3'-3"	59 x 7 x 5'-5"

LICENSED PROFESSIONAL ENGINEER LESLIE E. ROBERTS No. 34280 STATE OF NEW YORK

* Provide proper splice pls., bolt holes & finished col. top for future columns. Use upper col. one size smaller except as shown.
▲ See detail on 10-JK4-3 and 4..
■ Splice 3" above slab. See note on 10-JK2-2.
⊖ See detail on 10-JK2-30.

10-J1-26

WORTHINGTON, SKILLING, HELLE & JACKSON Civil & Structural Engineers

PROJECT THE WORLD TRADE CENTER | TITLE COLUMN SCHEDULE | DATE 5-15-67

REVISIONS
2-9-68
4-5-68
6-17-68

	JG-1	JG-2	JG-3	JG-4	JG-5	JG-6	JG-7
El. 332'		10-JK2-17	10-JK2-17	10-JK2-17	10-JK2-17	10-JK2-17	10-JK2-17
El. 310'	*						
El. 294'			14WF287 (Fy=50)	14WF287 (Fy=50)	14WF320 (Fy=50)	14WF314 (Fy=50)	14WF314 (Fy=50)
El. 284'	14WF158 (Fy=50)	Part of truss UT-1 See dwg. 11-J1-2 14WF320 (Fy=50)					
El. 274'							
El. 264'	14WF237 (Fy=50)		14WF370 (Fy=50)	14WF370 (Fy=50)	14WF426 (Fy=50)	14WF398 (Fy=50)	14WF398 (Fy=50)
El. 253	▲ 14WF237 (Fy=50)	14WF730 (Fy=46)	▲ 14WF370 (Fy=50)	▲ 14WF370 (Fy=50)	▲ 14WF426 (Fy=50)	▲ 14WF398 (Fy=50)	▲ 14WF398 (Fy=50)
Top of base Pl at El. 241'							
Base Plate	46×4¾×4'-1"	80×10×7'-3"	60×7½×5'-3"	60×7½×5'-3"	63×7¾×5'-7"	63×7½×5'-6"	63×7½×5'-6"

* Provide proper splice pls., bolt holes & finished col. top for future columns. Use upper col. one size smaller except as shown.
▲ See detail on 10-JK4-3 and 4.
■ Splice 3" above slab. See note on 10-JK2-2.
● See detail on 10-JK2-30.

10-J1-27

LICENSED PROFESSIONAL ENGINEER LESLIE E. ROBERTSON No. 34360 UNIVERSITY OF THE STATE OF NEW YORK

A

WORTHINGTON, SKILLING, HELLE & JACKSON — Civil & Structural Engineers

PROJECT: THE WORLD TRADE CENTER | TITLE: COLUMN SCHEDULE | DATE: 5-15-67

REVISIONS
2-9-68
5-1-68
6-7-68
6-17-68

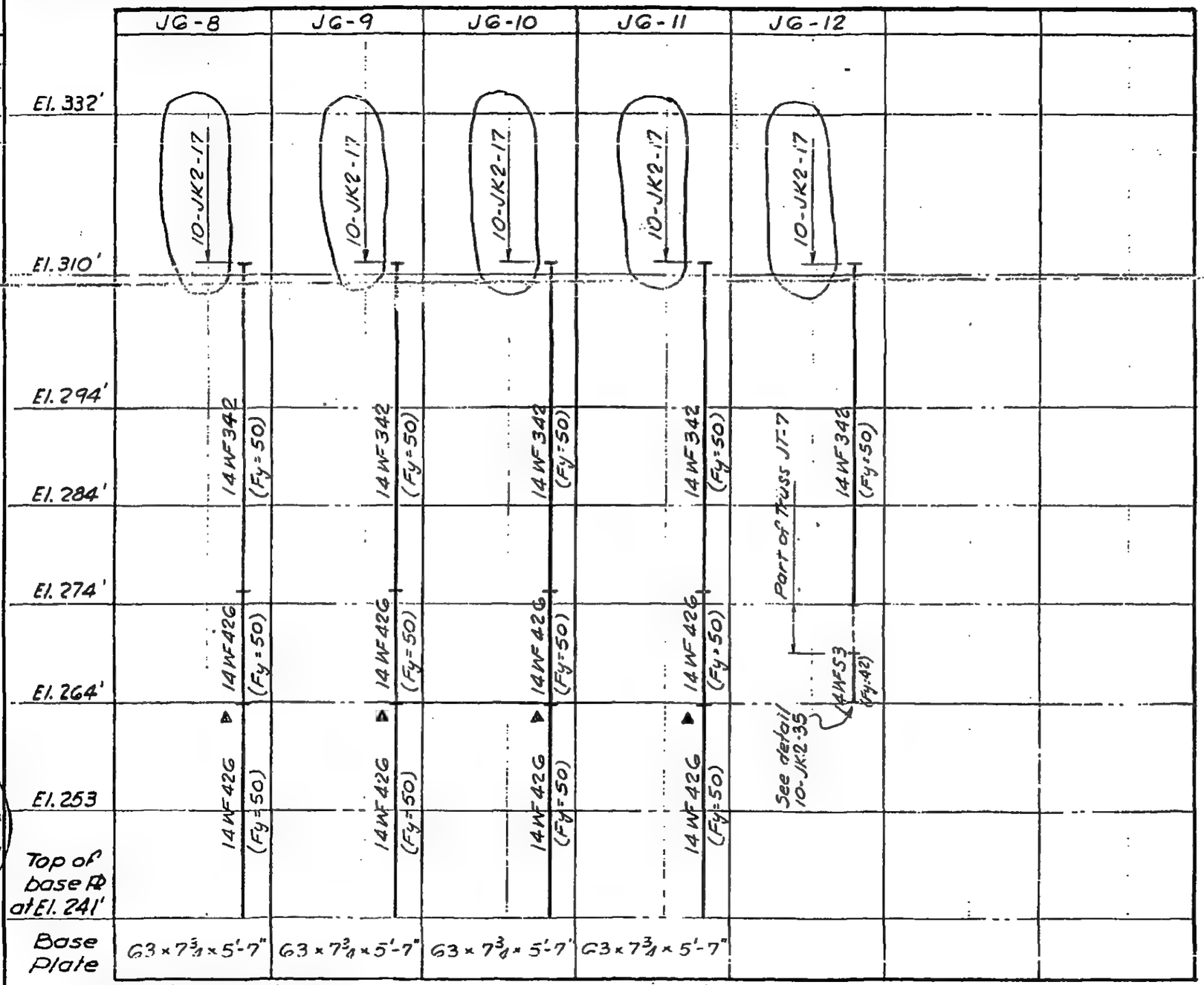

✱ Provide proper splice pls., bolt holes & finished col. top for future columns. Use upper col. one size smaller except as shown.
▲ See detail on 10-JK4-3 and 4.
■ Splice 3" above slab. See note on 10-JK2-2.
● See detail on 10-JK2-30.

10-J1-28

LICENSED PROFESSIONAL ENGINEER
LESLIE E. ROBERTSON
No. 34360
UNIVERSITY OF THE STATE OF NEW YORK

WORTHINGTON, SKILLING, HELLE & JACKSON — Civil & Structural Engineers

PROJECT: THE WORLD TRADE CENTER | TITLE: COLUMN SCHEDULE | DATE: 5-15-67

REVISIONS
5-1-68
6-17-68

	J6-13		J6-15	J6-16	J6-17		
El. 332'							
El. 310'				10-JK2-17			
El. 290'				Top of PL Girder; 14WF455 (Fy=50)	14WF246 (Fy=50)		
El. 274'	14WF111 (Fy=50)		See detail 10-JK4-4B; 14WF136 (Fy=50)		14WF455 (Fy=50)		
El. 264'	▲				▲		
Top of base PL	14WF111 (Fy=50) El. 243'-4"		14WF136 (Fy=50) El. 243'-9"		14WF455 (Fy=50) El. 243'-9"		
Base Plate	29 × 2½ × 2'-7"		32 × 3 × 2'-11"		55 × 6½ × 5'-0"		

* Provide proper splice pls., bolt holes & finished col. top for future columns. Use upper col. one size smaller except as shown.
▲ See detail on 10-JK4-3 and 4..
■ Splice 3" above slab. See note on 10-JK2-2.
● See detail on 10-JK2-30.

10-J1-29

LICENSED PROFESSIONAL ENGINEER LESLIE E. ROBERTSON No. 34550 UNIVERSITY OF THE STATE OF NEW YORK

B

WORTHINGTON, SKILLING, HELLE & JACKSON Civil & Structural Engineers

PROJECT THE WORLD TRADE CENTER | TITLE COLUMN SCHEDULE | DATE 5-15-67

REVISIONS
2-9-68

	JG-51
El. 332'	
El. 310'	
Street level	
El. 294'	14 WF 87 (Fy=50)
El. 284'	
El. 274'	14 WF 167 (Fy=50)
El. 264'	
El. 253	▲ 14 WF 167 (Fy=50)
Top of base Pl. El. 245'	
Base Plate	32 × 2 7/8 × 2'-9"

✱ Provide proper splice pls., bolt holes & finished col. top for future columns. Use upper col. one size smaller except as shown.
▲ See detail on 10-JK4-3 and 4.
■ Splice 3" above slab. See note on 10-JK2-2.
● See detail on 10-JK2-30.

10-J1-31

WORTHINGTON, SKILLING, HELLE & JACKSON Civil & Structural Engineers

PROJECT THE WORLD TRADE CENTER | TITLE COLUMN SCHEDULE | DATE 5-15-67

REVISIONS
2-9-68
6-17-68

	J7-1	J7-2	J7-3	J7-4	J7-5	J7-6	J7-7
El. 332'		Def. 104 10-JK2-7	10-JK2-17	10-JK2-17	10-JK2-17	10-JK2-17	10-JK2-17
El. 310'	*						
El. 294'							
El. 284'	14 WF 150 (Fy=50)	14 WF 370 (Fy=50)	14 WF 342 (Fy=50)	14 WF 314 (Fy=50)	14 WF 287 (Fy=50)	14 WF 287 (Fy=50)	14 WF 287 (Fy=50)
El. 274'							
El. 264'	14 WF 246 (Fy=50)	14 WF 455 (Fy=50)	14 WF 455 (Fy=50)	14 WF 426 (Fy=50)	14 WF 370 (Fy=50)	14 WF 370 (Fy=50)	14 WF 370 (Fy=50)
El. 253	▲ 14 WF 246 (Fy=50)	▲ 14 WF 455 (Fy=50)	▲ 14 WF 455 (Fy=50)	▲ 14 WF 426 (Fy=50)	▲ 14 WF 370 (Fy=50)	▲ 14 WF 370 (Fy=50)	▲ 14 WF 370 (Fy=50)
Top of base @ at El. 241'							
Base Plate	45 × 5⅛ × 3'-11"	64 × 8 × 5'-9"	64 × 8 × 5'-9"	63 × 7¾ × 5'-7"	60 × 7¼ × 5'-3"	60 × 7¼ × 5'-3"	60 × 7¼ × 5'-3"

* Provide proper splice pls., bolt holes & finished col. top for future columns. Use upper col. one size smaller except as shown.
▲ See detail on 10-JK4-3 and 4.
■ Splice 3" above slab. See note on 10-JK2-2.
● See detail on 10-JK2-30.

LICENSED PROFESSIONAL ENGINEER LESLIE E. ROBERTSON No. 34360 UNIVERSITY OF THE STATE OF NEW YORK

10-J1-32

WORTHINGTON, SKILLING, HELLE & JACKSON Civil & Structural Engineers

PROJECT THE WORLD TRADE CENTER | TITLE COLUMN SCHEDULE | DATE 5-15-67

REVISIONS
2-9-68
5-1-68
6-17-68

	J7-8	J7-9	J7-10	J7-11	J7-12	J7-13
El. 332'	10-JK2-17	10-JK2-17	10-JK2-17	10-JK2-17		10-JK2-17
El. 310'						
El. 294'	14 WF 287 (Fy=50)	14 WF 287 (Fy=50)	14 WF 287 (Fy=50)	14 WF 287 (Fy=50)		3'-0" 14 WF 264 (Fy=50)
El. 284'					Part of Truss J7-8	Part of Truss J7-8
El. 274'						
El. 264'	14 WF 370 (Fy=50)	14 WF 398 (Fy=50)	14 WF 370 (Fy=50)	14 WF 370 (Fy=50)	14 WF 87 (Fy=42)	
El. 253	▲ 14 WF 370 (Fy=50)	▲ 14 WF 398 (Fy=50)	▲ 14 WF 370 (Fy=50)	▲ 14 WF 370 (Fy=50)	14 WF 246 (Fy=50)	
Top of base Pl.	El. 241'	El. 241'	El. 241'	El. 241'	El. 241'	
Base Plate	60 × 7⅛ × 5'-3"	62 × 7½ × 5'-6"	60 × 7⅛ × 5'-3"	60 × 7⅛ × 5'-3"	49 × 5⅝ × 4'-3"	

LICENSED PROFESSIONAL ENGINEER LESLIE E. ROBERTSON No. 34360 UNIVERSITY OF THE STATE OF NEW YORK

* Provide proper splice pls., bolt holes & finished col. top for future columns. Use upper col. one size smaller except as shown.
▲ See detail on 10-JK4-3 and 4.
■ Splice 3" above slab. See note on 10-JK2-2.
● See detail on 10-JK2-30.

10-J1-33

WORTHINGTON, SKILLING, HELLE & JACKSON — Civil & Structural Engineers

PROJECT: THE WORLD TRADE CENTER | TITLE: COLUMN SCHEDULE | DATE: 5-15-67

REVISIONS: 5-1-68

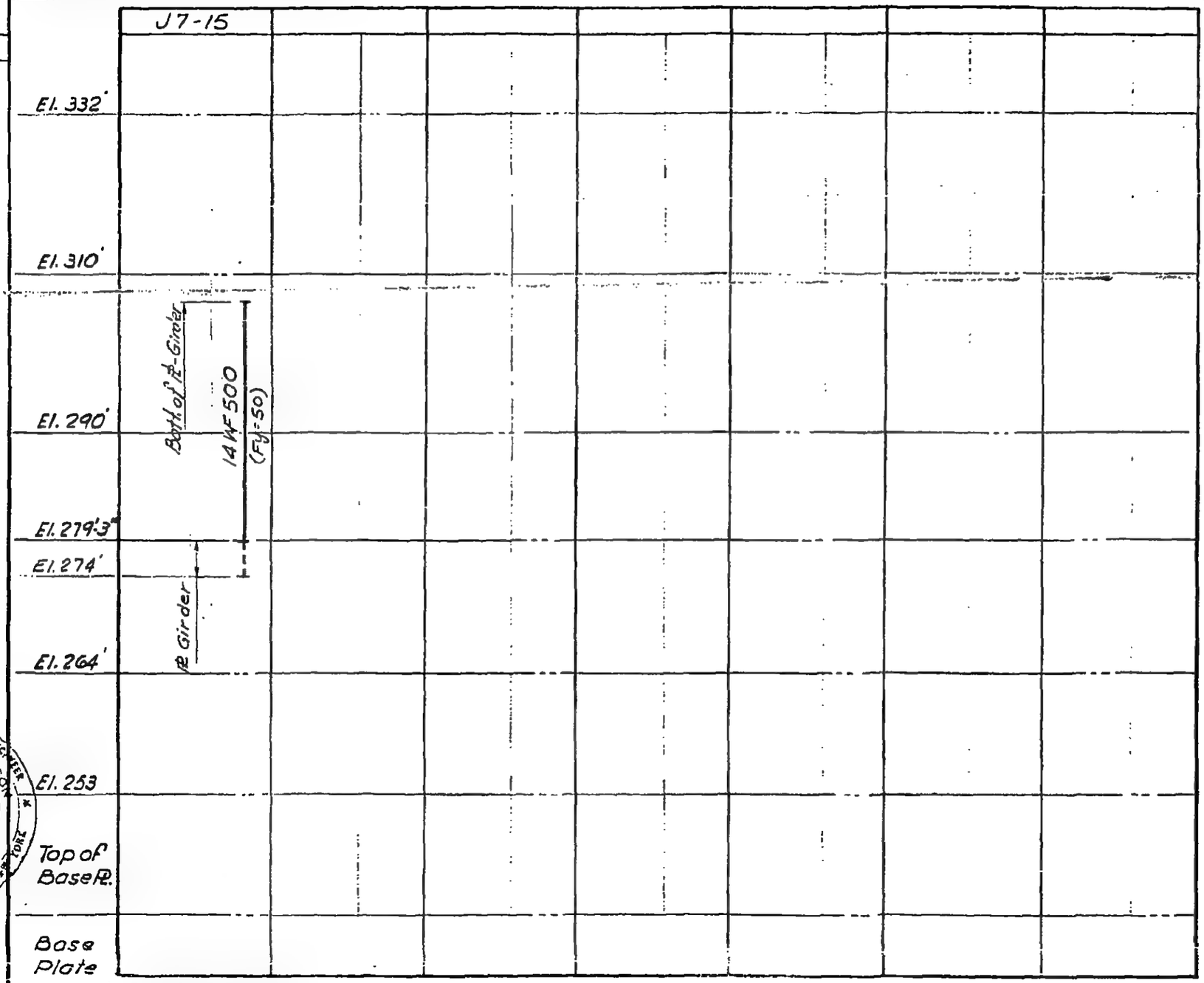

✱ Provide proper splice pls., bolt holes & finished col. top for future columns. Use upper col. one size smaller except as shown.
▲ See detail on 10-JK4-3 and 4.
■ Splice 3" above slab. See note on 10-JK2-2.
● See detail on 10-JK2-30.

10-J1-35

LICENSED PROFESSIONAL ENGINEER LESLIE E. ROBERTSON No. 34260 UNIVERSITY OF THE STATE OF NEW YORK

C

WORTHINGTON, SKILLING, HELLE & JACKSON — Civil & Structural Engineers

PROJECT: THE WORLD TRADE CENTER | TITLE: COLUMN SCHEDULE | DATE: 5-15-67

REVISIONS
5-1-68
6-7-68
9-4-68

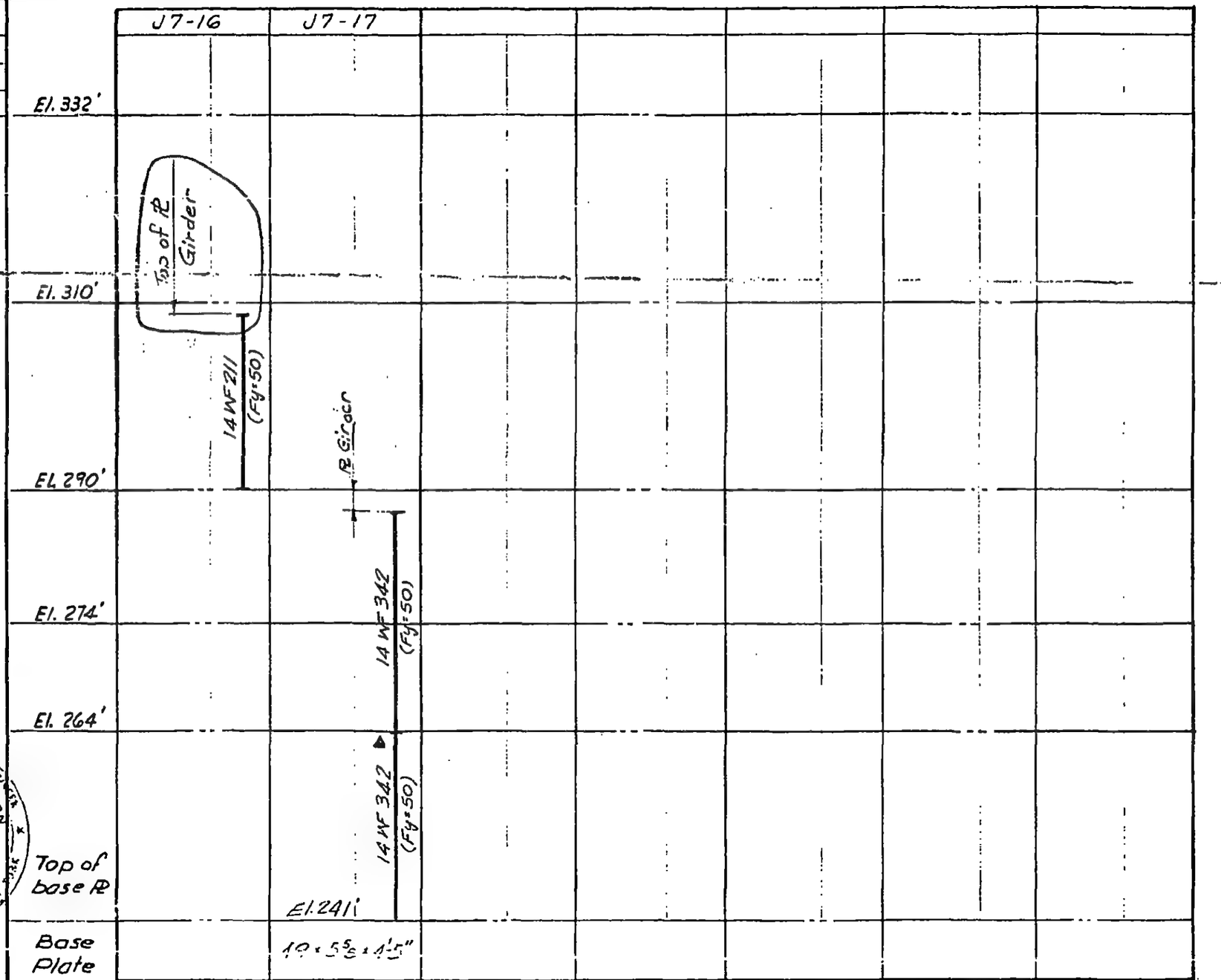

✱ Provide proper splice pls., bolt holes & finished col. top for future columns. Use upper col. one size smaller except as shown.
▲ See detail on 10-JK4-3 and 4.
■ Splice 3" above slab. See note on 10-JK2-2.
● See detail on 10-JK2-30.

10-J1-36

LICENSED PROFESSIONAL ENGINEER — LESLIE E. ROBERTSON — No. 34830 — UNIVERSITY OF THE STATE OF NEW YORK

B

WORTHINGTON, SKILLING, HELLE & JACKSON Civil & Structural Engineers

PROJECT THE WORLD TRADE CENTER | TITLE COLUMN SCHEDULE | DATE 5-15-67

REVISIONS
2-9-68

	J7-51	J7-52	J7-53
El. 332'			
El. 310'			
Street level			
El. 294'		14WF87 (Fy-50)	14WF84 (Fy=42)
El. 284'			
El. 274'			
El. 264'	14WF127 (Fy=50)		14WF119 (Fy=50)
El. 253	▲ 14WF127 (Fy=50)		▲ 14WF119 (Fy=50)
Top of base PR at El. 241'			
Base Plate	33 × 3¼ × 3'-0"		32 × 3 × 2'-9"

* Provide proper splice pls., bolt holes & finished col. top for future columns. Use upper col. one size smaller except as shown.
▲ See detail on 10-JK4-3 and 4.
■ Splice 3" above slab. See note on 10-JK2-2.
● See detail on 10-JK2-30.

10-J1-37

LICENSED PROFESSIONAL ENGINEER LESLIE E. ROBERTSON No. 34360 UNIVERSITY OF THE STATE OF NEW YORK

WORTHINGTON, SKILLING, HELLE & JACKSON — Civil & Structural Engineers

PROJECT: THE WORLD TRADE CENTER | TITLE: COLUMN SCHEDULE | DATE: 5-15-67

REVISIONS
2-9-68
4-5-68
6-17-68
11-5-68

	J8-1	J8-2	J8-3	J8-4	J8-5	J8-6	J8-7
El. 332'							
El. 310'	*	*	10-JK2-17	10-JK2-17	10-JK2-17	See detail 10-JK2-17 3'-0" 14WF211 (Fy=50)	10-JK2-17
El. 294'						10 JK2-34	
El. 284'	14WF158 (Fy=50)	14WF142 (Fy=50)	14WF320 (Fy=50)	14WF287 (Fy=50)	14WF264 (Fy=50)	See detail 22 5/8 x 15 3/8 I 2 PLs 15 3/8 x 2 1/2 1 PL 17 5/8 x 1 1/2 (Fy=50)	14WF287 (Fy=50)
El. 274'	+	+	+	+	+	+	+
El. 264'	14WF264 (Fy=50)	14WF228 (Fy=50)	14WF426 (Fy=50)	14WF370 (Fy=50)	14WF370 (Fy=50)	14WF370 (Fy=50)	14WF398 (Fy=50)
El. 253	▲ 14WF264 (Fy=50)	▲ 14WF228 (Fy=50)	▲ 14WF426 (Fy=50)	▲ 14WF370 (Fy=50)	▲ 14WF370 (Fy=50)	▲ 14WF370 (Fy=50)	▲ 14WF398 (Fy=50)
Top of base PL at El. 241'							
Base Plate	49 x 5 5/8 x 4'-3"	47 x 5 x 4'-2"	63 x 7 3/8 x 5'-7"	60 x 7 1/8 x 5'-3"	60 x 7 1/8 x 5'-3"	60 x 7 1/8 x 5'-3"	62 x 7 1/8 x 5'-3"

* Provide proper splice pls., bolt holes & finished col. top for future columns. Use upper col. one size smaller except as shown.
▲ See detail on 10-JK4-3 and 4.
■ Splice 3" above slab. See note on 10-JK2-2.
● See detail on 10-JK2-30.

LICENSED PROFESSIONAL ENGINEER LESLIE E. ROBERTSON No. 34360 UNIVERSITY OF THE STATE OF NEW YORK

10-31-68

10-J1-38

A

WORTHINGTON, SKILLING, HELLE & JACKSON — Civil & Structural Engineers

PROJECT: THE WORLD TRADE CENTER | TITLE: COLUMN SCHEDULE | DATE: 5-15-67

REVISIONS
2-9-68
5-1-68
6-17-68

	J8-8	J8-9	J8-10
El. 332'	10-JK2-17	10-JK2-17	10-JK2-17
El. 310'			
El. 294'	14WF287 (Fy=50)	14WF342 (Fy=50)	14WF370 (Fy=50)
El. 284'			
El. 274'			
El. 264'	14WF370 (Fy=50) ▲	14WF426 (Fy=50) ▲	14WF455 (Fy=50) ▲
El. 253	14WF370 (Fy=50) ▲	14WF426 (Fy=50) ▲	14WF455 (Fy=50) ▲
Top of base Pl	El. 241'	El. 241'	El. 241'
Base Plate	60 × 7¼ × 5'-3"	63 × 7¾ × 5'-7"	66 × 8 × 5'-11"

* Provide proper splice pls., bolt holes & finished col. top for future columns. Use upper col. one size smaller except as shown.
▲ See detail on 10-JK4-3 and 4.
■ Splice 3" above slab. See note on 10-JK2-2.
● See detail on 10-JK2-30.

10-J1-39

LICENSED PROFESSIONAL ENGINEER — LESLIE E. ROBERTSON — No. 34360 — UNIVERSITY OF THE STATE OF NEW YORK

WORTHINGTON, SKILLING, HELLE & JACKSON Civil & Structural Engineers

PROJECT THE WORLD TRADE CENTER | TITLE COLUMN SCHEDULE | DATE 5-15-67

REVISIONS
5-1-68
6-17-68

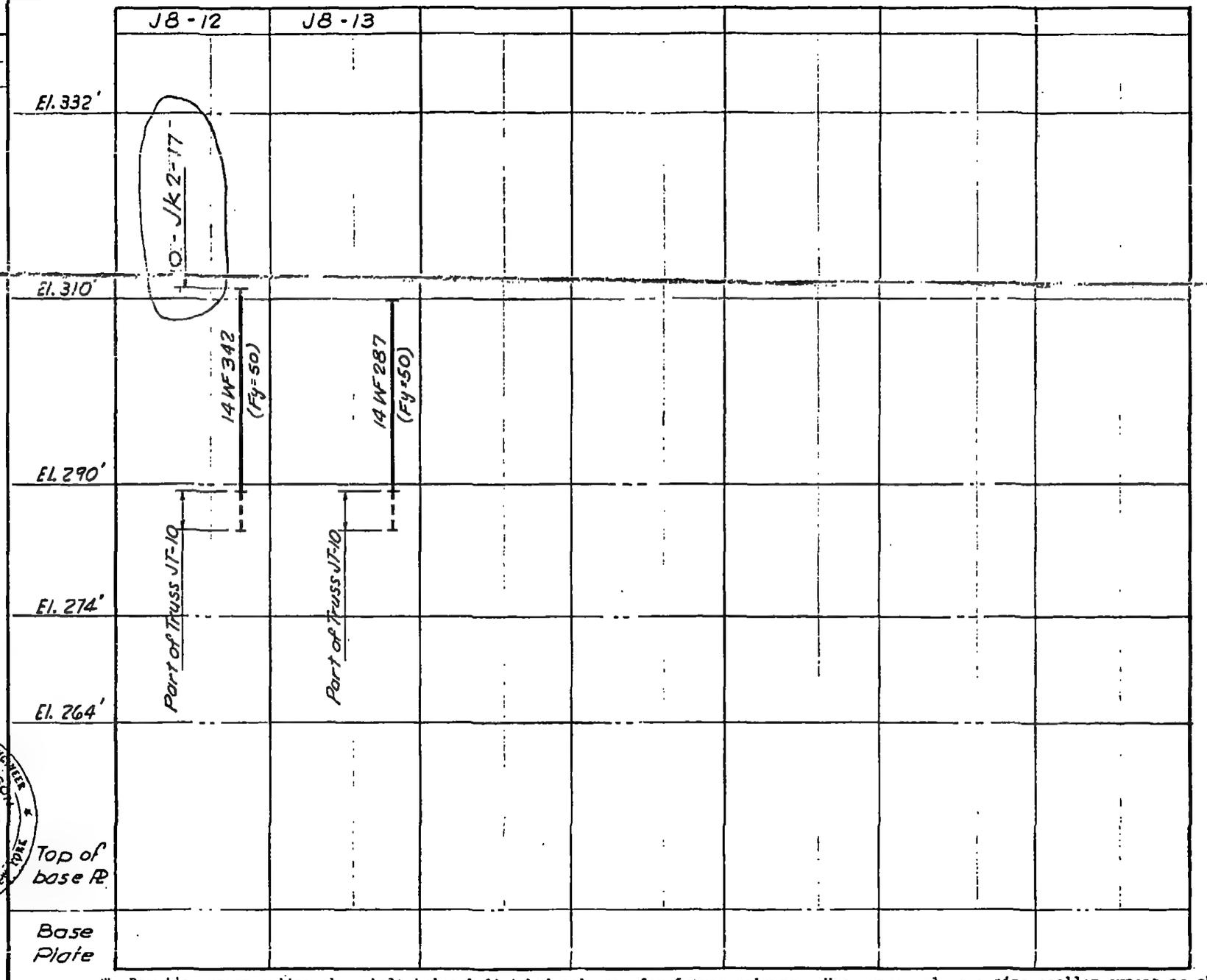

LICENSED PROFESSIONAL ENGINEER
LESLIE E. ROBERTSON
No. 34360
UNIVERSITY OF THE STATE OF NEW YORK

* Provide proper splice pls., bolt holes & finished col. top for future columns. Use upper col. one size smaller except as shown.
▲ See detail on 10-JK4-3 and 4..
■ Splice 3" above slab. See note on 10-JK2-2.
● See detail on 10-JK2-30.

10-J1-40

WORTHINGTON, SKILLING, HELLE & JACKSON Civil & Structural Engineers

PROJECT THE WORLD TRADE CENTER | TITLE COLUMN SCHEDULE | DATE 5-15-67

REVISIONS
2-9-68

	J8-51		J8-53	J8-54			
El. 332'							
El. 310'			* T				
Street level							
El. 294'		14 WF 95 (Fy=50)	14 WF 150 (Fy=50)	14 WF 87 (Fy=42)			
El. 284'							
El. 274'		14 WF 176 (Fy=50)	14 WF 211 (Fy=50)	14 WF 103 (Fy=50)			
El. 264'							
El. 253		▲ 14 WF 176 (Fy=50)	▲ 14 WF 211 (Fy=50)	▲ 14 WF 103 (Fy=50)			
Top of base Pl at El. 241'							
Base plate	39 × 3 7/8 × 3'-5"		44 × 4 5/8 × 3'-11"	31 × 2 7/8 × 2'-9"			

* Provide proper splice pls., bolt holes & finished col. top for future columns. Use upper col. one size smaller except as shown.
▲ See detail on 10-JK4-3 and 4.
■ Splice 3" above slab. See note on 10-JK2-2.
● See detail on 10-JK2-30.

10-J1-41

LICENSED PROFESSIONAL ENGINEER LESLIE E. ROBERTSON No. 34360 UNIVERSITY OF THE STATE OF NEW YORK

WORTHINGTON, SKILLING, HELLE & JACKSON — Civil & Structural Engineers

PROJECT: THE WORLD TRADE CENTER | TITLE: COLUMN SCHEDULE | DATE: 5-15-67

REVISIONS

5-1-68

6-7-68

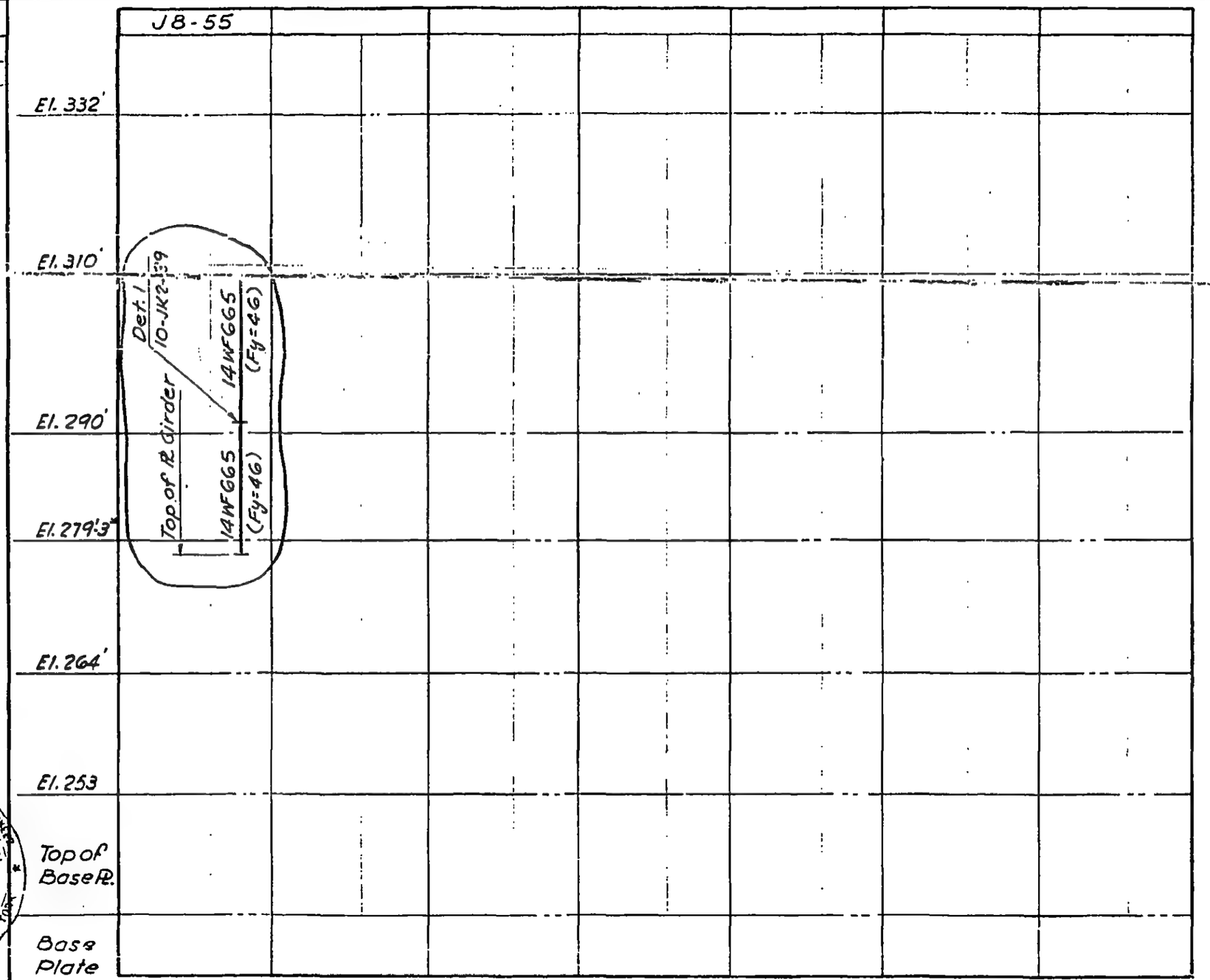

LICENSED PROFESSIONAL ENGINEER
LESLIE E. ROBERTSON
No. 94360
UNIVERSITY OF THE STATE OF NEW YORK

* Provide proper splice pls., bolt holes & finished col. top for future columns. Use upper col. one size smaller except as shown.
▲ See detail on 10-JK4-3 and 4.
■ Splice 3" above slab. See note on 10-JK2-2.
● See detail on 10-JK2-30.

10-J1-42

WORTHINGTON, SKILLING, HELLE & JACKSON — Civil & Structural Engineers

PROJECT: THE WORLD TRADE CENTER | TITLE: COLUMN SCHEDULE | DATE: 5-15-67

REVISIONS
10-20-67
11-8-67
6-17-68
1-8-69

	J9-1	J9-2	J9-3	J9-4	J9-5	J9-6	J9-7
El. 332'	10-JK2-17	10-JK2-17	10-JK2-17	10-JK2-17	10-JK2-17	10-JK2-38A	
El. 310'							*
El. 294'	14 WF 398 (Fy=50)	14 WF 370 (Fy=50)	14 WF 370 (Fy=50)	14 WF 370 (Fy=50)	14 WF 370 (Fy=50)	14 WF 398 (Fy=50)	14 WF 136 (Fy=50)
El. 284'							
El. 274'							
El. 264'	14 WF 426 (Fy=50)	14 WF 426 (Fy=50)	14 WF 426 (Fy=50)	14 WF 426 (Fy=50)	14 WF 426 (Fy=50)	14 WF 426 (Fy=50)	14 WF 167 (Fy=50)
El. 253	▲ 14 WF 500 (Fy=50)	▲ 14 WF 455 (Fy=50)	▲ 14 WF 455 (Fy=50)	▲ 14 WF 455 (Fy=50)	▲ 14 WF 455 (Fy=50)	▲ 14 WF 500 (Fy=50)	▲ 14 WF 228 (Fy=50)
Top of base Pl at El. 241'							
Base Plate	60 × 7½ × 5'-5"	60 × 7½ × 5'-5"	60 × 7½ × 5'-5"	60 × 7½ × 5'-5"	60 × 7½ × 5'-5"	62 × 7½ × 5'-6"	44 × 4⅞ × 3'-10"

LICENSED PROFESSIONAL ENGINEER — LESLIE E. ROBERTSON — No. 34360 — UNIVERSITY OF THE STATE OF NEW YORK

DRAWN S.C.
REVIEWED E.L.

*Provide proper splice pls., bolt holes & finished col. top for future columns. Use upper col. one size smaller except as shown.
▲See detail on 10-JK4-3 and 4.
■Splice 3" above slab. See note on 10-JK2-2.
●See detail on 10-JK2-30.

10-JI-43

WORTHINGTON, SKILLING, HELLE & JACKSON — Civil & Structural Engineers

PROJECT: THE WORLD TRADE CENTER | TITLE: COLUMN SCHEDULE | DATE: 5-15-67

REVISIONS
10-20-67
11-8-67

	J9-8
El. 332'	
El. 310'	(*)
El. 294'	14 WF 167 (Fy=50)
El. 284'	
El. 274'	(+)
El. 264'	14 WF 211 (Fy=50)
El. 253	(▲) 14 WF 246 (Fy=50)
Top of base Pl at El. 241'	
Base Plate	16 × 4⅞ × 4'-1"

*Provide proper splice pls., bolt holes & finished col. top for future columns. Use upper col. one size smaller except as shown.
▲See detail on 10-JK4-3 and 4.
■Splice 3" above slab. See note on 10-JK2-2.
●See detail on 10-JK2-30.

10-JI-44

LICENSED PROFESSIONAL ENGINEER LESLIE E. ROBERTSON NO. [illegible] UNIVERSITY OF THE STATE OF NEW YORK

A

WORTHINGTON, SKILLING, HELLE & JACKSON Civil & Structural Engineers

PROJECT THE WORLD TRADE CENTER | TITLE COLUMN SCHEDULE | DATE 5-15-67

REVISIONS

5-1-68

	J9-9
El. 332'	
El. 310'	
El. 290'	14 WF 150 (Fy=50)
El. 274'	
El. 264'	
Top of base Pl -1 El.	
Base Plate	

* Provide proper splice pls., bolt holes & finished col. top for future columns. Use upper col. one size smaller except as shown.
▲ See detail on 10-JK4-3 and 4..
■ Splice 3" above slab. See note on 10-JK2-2.
● See detail on 10-JK2-30.

10-J1-45

LICENSED PROFESSIONAL ENGINEER LESLIE E. ROBERTSON No. 34860 UNIVERSITY OF THE STATE OF NEW YORK

B

WORTHINGTON, SKILLING, HELLE & JACKSON Civil & Structural Engineers

PROJECT THE WORLD TRADE CENTER | TITLE COLUMN SCHEDULE | DATE 5-15-67

REVISIONS
10-20-67
11-8-67

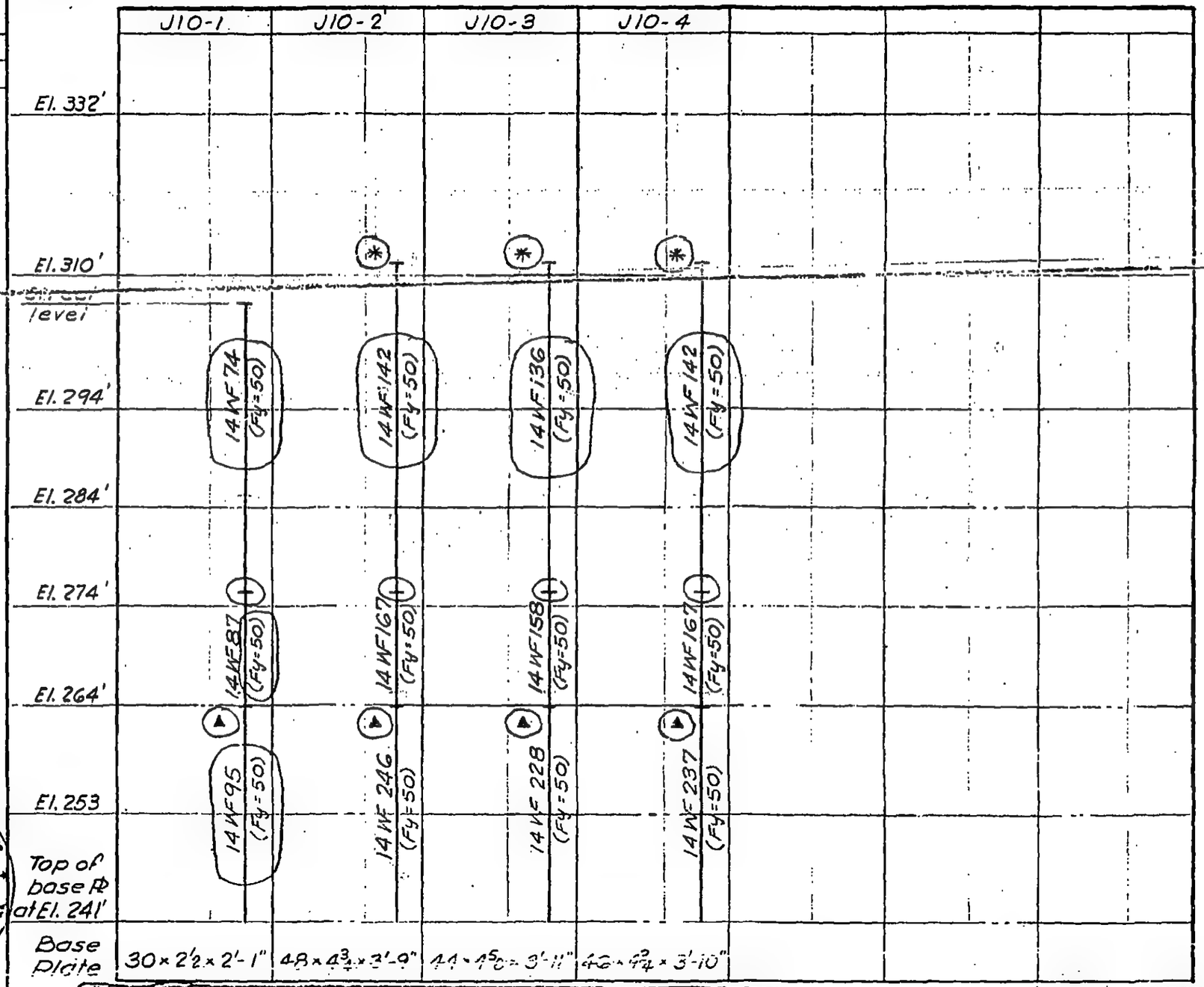

* Provide proper splice pls., bolt holes & finished col. top for future columns. Use upper col. one size smaller except as shown.
▲ See detail on 10-JK4-3 and 4.
W/ Splice 3" above slab. See note on 10-JK2-2.
● See detail on 10-JK2-30.

10-J1-4G

LICENSED PROFESSIONAL ENGINEER LESLIE E. ROBERTSON No. 34360 UNIVERSITY OF THE STATE OF NEW YORK

WORTHINGTON, SKILLING, HELLE & JACKSON — Civil & Structural Engineers

PROJECT: THE WORLD TRADE CENTER | TITLE: COLUMN SCHEDULE | DATE: 5-15-67

REVISIONS
10-20-67
11-8-67

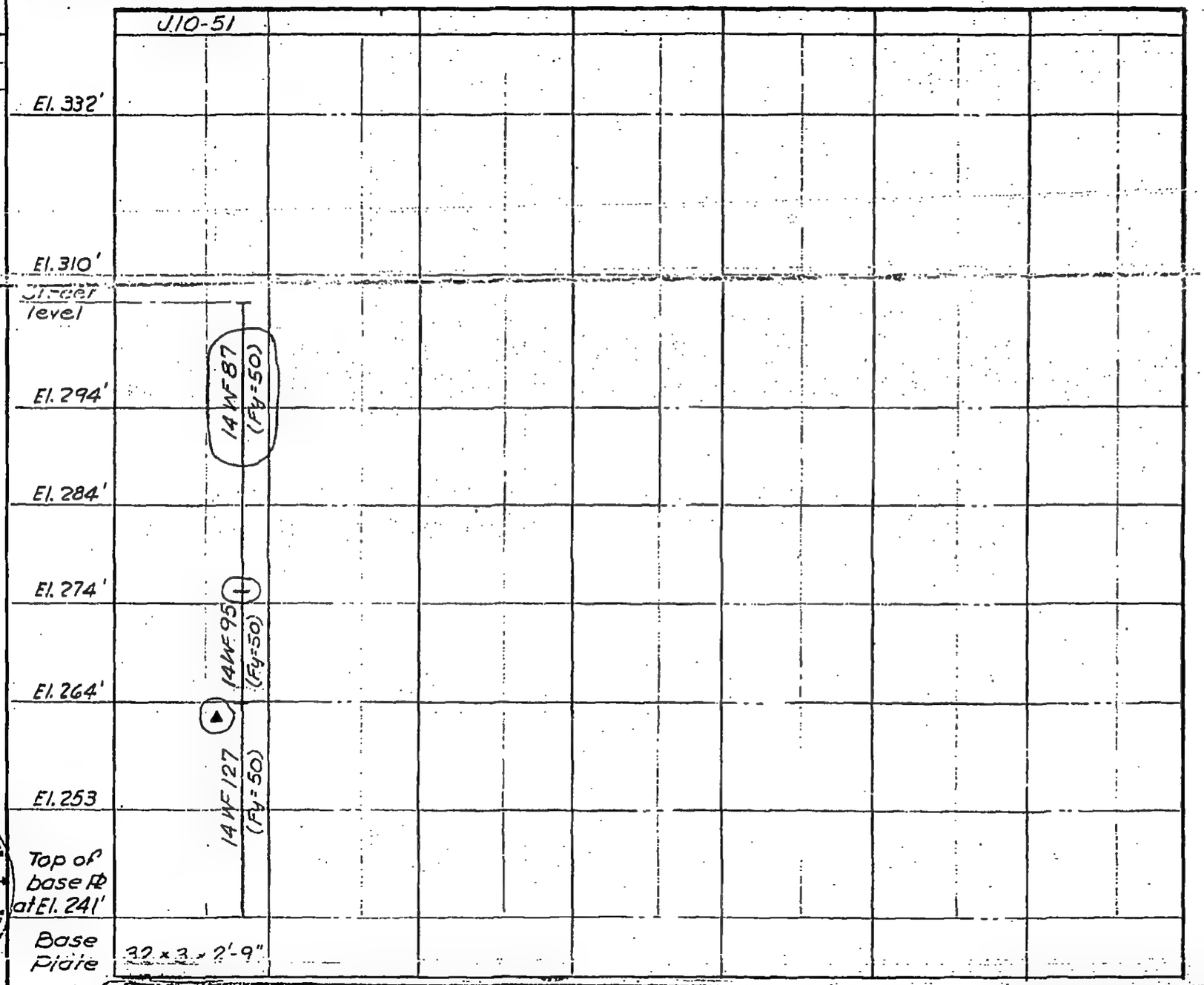

* Provide proper splice pts., bolt holes & finished col. top for future columns. Use upper col. one size smaller except as shown.
▲ See detail on 10-JK4-3 and 4.
■ Splice 3" above slab. See note on 10-JK2-2.
● See detail on 10-JK2-30.

10-J1-47

LICENSED PROFESSIONAL ENGINEER LESLIE E. ROBERTSON No. 34360 STATE OF NEW YORK

A

WORTHINGTON, SKILLING, HELLE & JACKSON — Civil & Structural Engineers

PROJECT: THE WORLD TRADE CENTER | TITLE: COLUMN SCHEDULE | DATE: 5-15-67

REVISIONS
10-20-67
11-8-67

	J11-1	J11-2	J11-3	J11-4	J11-5	J11-6	J11-7
El. 332'							
El. 310'	●	●	●	●	●	●	●
El. 294'	14 WF 426 (Fy=50)	14 WF 398 (Fy=50)	14 WF 398 (Fy=50)	14 WF 398 (Fy=50)	14 WF 398 (Fy=50)	14 WF 398 (Fy=50)	14 WF 150 (Fy=50)
El. 284'							
El. 274'	⊣ 14 WF 455 (Fy=50)	⊣ 14 WF 455 (Fy=50)	⊣ 14 WF 455 (Fy=50)	⊣ 14 WF 455 (Fy=50)	⊣ 14 WF 455 (Fy=50)	⊣ 14 WF 455 (Fy=50)	⊣ 14 WF 167 (Fy=50)
El. 264'							
El. 253	▲ 14 WF 550 (Fy=50)	▲ 14 WF 500 (Fy=50)	▲ 14 WF 500 (Fy=50)	▲ 14 WF 500 (Fy=50)	▲ 14 WF 500 (Fy=50)	▲ 14 WF 500 (Fy=50)	▲ 14 WF 237 (Fy=50)
Top of base Pl at El. 241'							
Base Plate	72 × 8¾ × 6'-10"	72 × 8¾ × 6'-10"	72 × 8¾ × 6'-10"	72 × 8¾ × 6'-10"	72 × 8¾ × 6'-10"	72 × 8¾ × 6'-10"	44 × 4½ × 3'-10"

* Provide proper splice pls., bolt holes & finished col. top for future columns. Use upper col. one size smaller except as shown.
▲ See detail on 10-JK4-3 and 4.
■ Splice 3" above slab. See note on 10-JK2-2.
● See detail on 10-JK2-2a.

10-J1-48

LICENSED PROFESSIONAL ENGINEER — LESLIE E. ROBERTSON — No. 34360 — UNIVERSITY OF THE STATE OF NEW YORK

A

WORTHINGTON, SKILLING, HELLE & JACKSON — Civil & Structural Engineers

PROJECT: THE WORLD TRADE CENTER | TITLE: COLUMN SCHEDULE | DATE: 5-15-67

REVISIONS
10-20-67
11-8-67

	J11-8
El. 332'	
El. 310'	■
El. 294'	▲ 14 WF 211 (Fy=50)
El. 284'	
El. 274'	●
El. 264'	▲ 14 WF 219 (Fy=50)
El. 253	▲ 14 WF 264 (Fy=50)
Top of base Pl at El. 241'	
Base Plate	48 × 5¼ × 4'-4"

* Provide proper splice pls., bolt holes & finished col. top for future columns. Use upper col. one size smaller except as shown.
▲ See detail on 10-JK4-3 and 4.
■ Splice 3" above slab. See note on 10-JK2-2.
● See detail on 10-JK2-90.

10-11-49

LICENSED PROFESSIONAL ENGINEER — LESLIE E. ROBERTSON — No. 34360 — UNIVERSITY OF THE STATE OF NEW YORK

A

WORTHINGTON, SKILLING, HELLE & JACKSON — Civil & Structural Engineers

PROJECT: THE WORLD TRADE CENTER | TITLE: COLUMN SCHEDULE | DATE: 5-15-67

REVISIONS
10-20-67
11-8-67

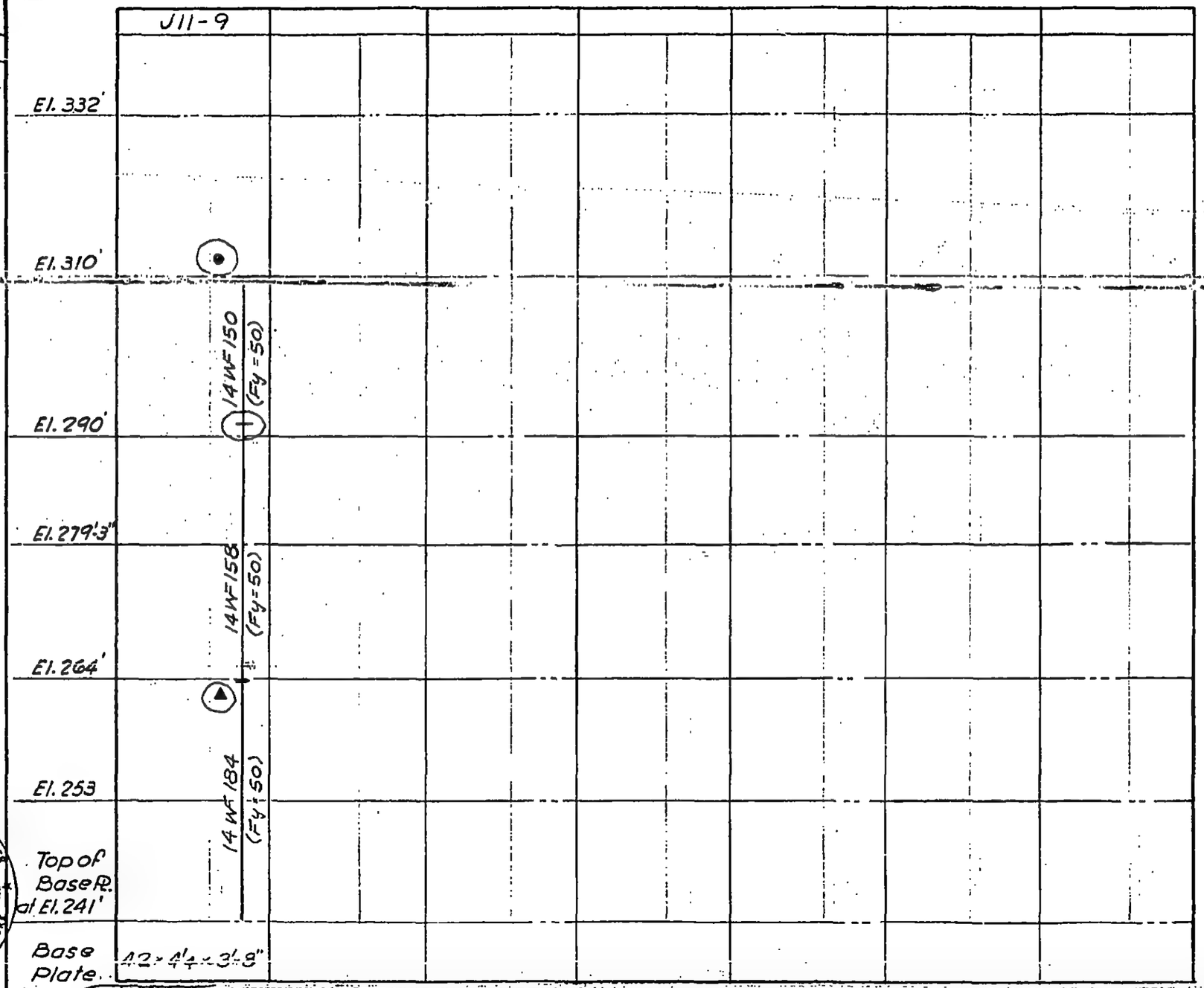

LICENSED PROFESSIONAL ENGINEER
LESLIE E. ROBERTSON
No. 34360
UNIVERSITY OF THE STATE OF NEW YORK

* Provide proper splice pls., bolt holes & finished col. top for future columns. Use upper col. one size smaller except as shown.
▲ See detail on 10-JK4-3 and 4.
■ Splice 3" above slab. See note on 10-JK2-2.
● See detail on 10-JK2-30.

10-J1-50

WORTHINGTON, SKILLING, HELLE & JACKSON — Civil & Structural Engineers

PROJECT: THE WORLD TRADE CENTER | TITLE: COLUMN SCHEDULE | DATE: 5-15-67

REVISIONS
10-20-67
11-8-67

	J12-1	J12-2	J12-3
El. 332'			
El. 310'	*	*	*
El. 294'	14 WF 127 (Fy=50)	14 WF 142 (Fy=50)	14 WF 150 (Fy=50)
El. 284'			
El. 274'	⊕	⊕	⊕
El. 264'	14 WF 150 (Fy=50)	14 WF 150 (Fy=50)	14 WF 167 (Fy=50)
El. 253	▲	▲	▲
Top of base Pl at El. 241'	14 WF 219 (Fy=50)	14 WF 228 (Fy=50)	14 WF 246 (Fy=50)
Base Plate	42 × 4¼ × 3'-8"	44 × 4½ × 3'-10"	50 × 5 × 3'-9"

* Provide proper splice pls., bolt holes & finished col. top for future columns. Use upper col. one size smaller except as shown.
▲ See detail on 10-JK4-3 & d. 4.
■ Splice 3" above slab. See note on 10-JK2-2.
● See detail on 10-JK4-30.

10-11-51

LICENSED PROFESSIONAL ENGINEER — LESLIE E. ROBERTSON — No. 34360 — UNIVERSITY OF THE STATE OF NEW YORK

A

WORTHINGTON, SKILLING, HELLE & JACKSON Civil & Structural Engineers

PROJECT THE WORLD TRADE CENTER | TITLE COLUMN SCHEDULE | DATE 5-15-67

REVISIONS
5-1-68

	J12-8
El. 332'	
El. 310'	* 14 WF 287 (Fy=50)
El. 290'	
El. 279'-3"	
El. 264'	14 WF 550 (Fy=50)
El. 253	▲ 14 WF 550 (Fy=50)
Top of Base Pl.	El. 243'-4"
Base Plate	53 × 6¼ × 5'-0"

* Provide proper splice pls., bolt holes & finished col. top for future columns. Use upper col. one size smaller except as shown.
▲ See detail on 10-JK4-3 and 4.
■ Splice 3" above slab. See note on 10-JK2-2.
● See detail on 10-JK2-30.

10-11-52

C

WORTHINGTON, SKILLING, HELLE & JACKSON — Civil & Structural Engineers

PROJECT: THE WORLD TRADE CENTER | TITLE: COLUMN SCHEDULE | DATE: 5-15-67

REVISIONS
10-20-67
11-8-67
1-5-68

	J12-51	J12-52	J12-53	C12-54	C12-55	C12-56	C12-57
El. 332'							
El. 310'		3'-0" * Splice 12WF58 By others	3'-0" * Splice 12WF58 By others	12WF58 By others	By others	By others	By others
Street level		El. 306'-9"	El. 307'-4"	El. 309'-10½	El. 309'-10½	El. 309'-6"	El. 309'-6"
		See detail on dwg. 10-JK2-31					
El. 294'	14WF87 (Fy=50)						
El. 284'							
El. 274'							
El. 264'	14WF103 (Fy=50)						
El. 253	14WF127 (Fy=50)						
Top of base Pl at El. 241'							
Base Plate		3/8 × 3½ × 2'-11"					

▲ Provide proper splice pls., bolt holes & finished col. top for future columns. Use upper col. one size smaller except as shown.
* Splice 3" above slab. See note on 10-JK2-2.
■ See detail on 10-JK7-10.

10-31-53

LICENSED PROFESSIONAL ENGINEER — LESLIE E. ROBERTSON — No. 34360 — UNIVERSITY OF THE STATE OF NEW YORK

A

WORTHINGTON, SKILLING, HELLE & JACKSON Civil & Structural Engineers

PROJECT THE WORLD TRADE CENTER | TITLE COLUMN SCHEDULE | DATE 5-15-67

REVISIONS
10-20-67
11-8-67

	J13-1	J13-2	J13-3	J13-4	J13-5	J13-6
El. 332'						
El. 310'	El. 305'-10"					
El. 294'	14 WF 167 (Fy=50)	14 WF 95 (Fy=50)	14 WF 95 (Fy=50)	14 WF 87 (Fy=50)	14 WF 87 (Fy=50)	14 WF 95 (Fy=50)
El. 284'						
El. 274'	14 WF 176 (Fy=50)	14 WF 111 (Fy=50)	14 WF 111 (Fy=50)	14 WF 111 (Fy=50)	14 WF 103 (Fy=50)	14 WF 103 (Fy=50)
El. 264'	▲ 14 WF 219 (Fy=50)	▲ 14 WF 158 (Fy=50)	▲ 14 WF 158 (Fy=50)	▲ 14 WF 142 (Fy=50)	▲ 14 WF 142 (Fy=50)	▲ 14 WF 127 (Fy=50)
El. 253						
Top of base Pl at El. 241'						
Base Plate	46 × 4¾ × 4'-0"	40 × 3¾ × 3'-2"	40 × 3¾ × 3'-2"	38 × 3½ × 2'-11"	38 × 3½ × 2'-11"	34 × 3⅜ × 3'-1"

* Provide proper splice pls., bolt holes & finished col. top for future columns. Use upper col. one size smaller except as shown.
▲ See detail on 10-JK4-3 and 4.
■ Splice 3" above slab. See note on 10-JK2-2.
● See detail on 10-JK2-30.

10-J1-54

LICENSED PROFESSIONAL ENGINEER LESLIE E. ROBERTSON No. 34360 UNIVERSITY OF THE STATE OF NEW YORK

A

WORTHINGTON, SKILLING, HELLE & JACKSON Civil & Structural Engineers

PROJECT THE WORLD TRADE CENTER | TITLE COLUMN SCHEDULE | DATE 5-15-67

REVISIONS

5-1-68

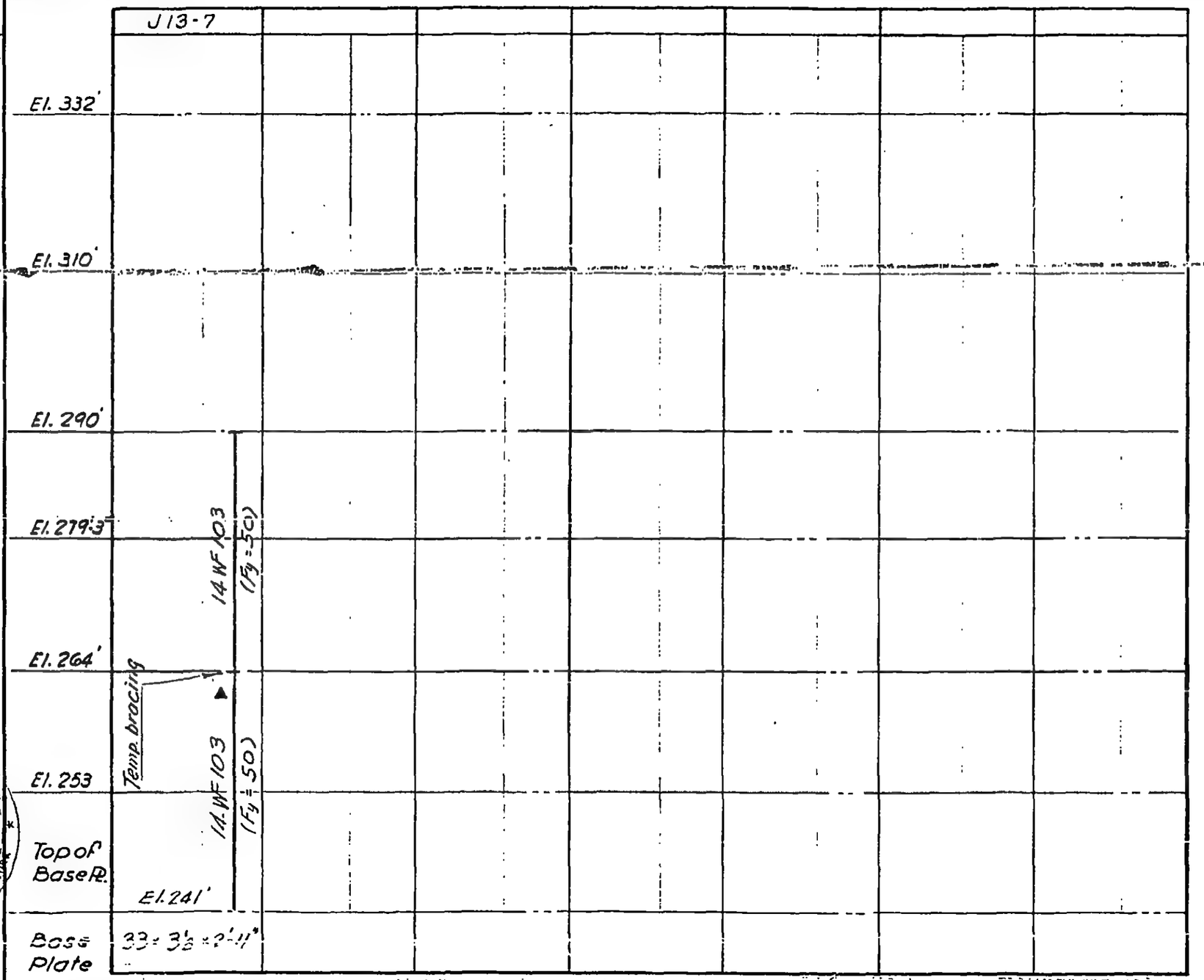

✱ Provide proper splice pls., bolt holes & finished col. top for future columns. Use upper col. one size smaller except as shown.
▲ See detail on 10-JK4-3 and 4.
■ Splice 3" above slab. - See note on 10-JK2-2.
● See detail on 10-JK2-30.

10-J1-55

LICENSED PROFESSIONAL ENGINEER
LESLIE E. ROBERTSON
No. 34860
UNIVERSITY OF THE STATE OF NEW YORK

WORTHINGTON, SKILLING, HELLE & JACKSON — Civil & Structural Engineers

PROJECT: THE WORLD TRADE CENTER | TITLE: COLUMN SCHEDULE | DATE: 5-15-67

REVISIONS
10-20-67
11-8-67

	J14-1	J14-2	J14-3	J14-4	J14-5	J14-6
El. 332'						
El. 310'						
Street level						
El. 294'	14 WF 103 (Fy=50)		14 WF 150 (Fy=50)	14 WF 142 (Fy=50)	14 WF 211 (Fy=50)	14 WF 61 (Fy=50)
El. 284'		14 WF 74 (Fy=50)				
El. 274'	14 WF 103 (Fy=50)		14 WF 176 (Fy=50)	14 WF 167 (Fy=50)	14 WF 228 (Fy=50)	14 WF 74 (Fy=50)
El. 264'	▲	▲	▲	▲	▲	▲
El. 253	14 WF 119 (Fy=50)	14 WF 111 (Fy=50)	14 WF 264 (Fy=50)	14 WF 246 (Fy=50)	14 WF 320 (Fy=50)	14 WF 111 (Fy=50)
Top of base Pl at El. 241'						
Base Plate	32 × 3 × 2'-7"	32 × 3 × 2'-9"	48 × 5¼ × 4'-4"	48 × 5¼ × 4'-2"	50 × 5 × 4'-0"	32 × 3 × 2'-9"

* Provide proper splice pls., bolt holes & finished col. top for future columns. Use upper col. one size smaller except as shown.
▲ See detail on 10-JK4-3 and 4.
■ Splice 3" above slab. See note on 10-JK2-2.
● See detail on 10-JK2-30.

10-J1-56

LICENSED PROFESSIONAL ENGINEER — LESLIE E. ROBERTSON — No. 34360 — UNIVERSITY OF THE STATE OF NEW YORK

WORTHINGTON, SKILLING, HELLE & JACKSON Civil & Structural Engineers

PROJECT THE WORLD TRADE CENTER | TITLE COLUMN SCHEDULE | DATE 5-15-67

REVISIONS
5-1-68
6-7-68
1-13-69

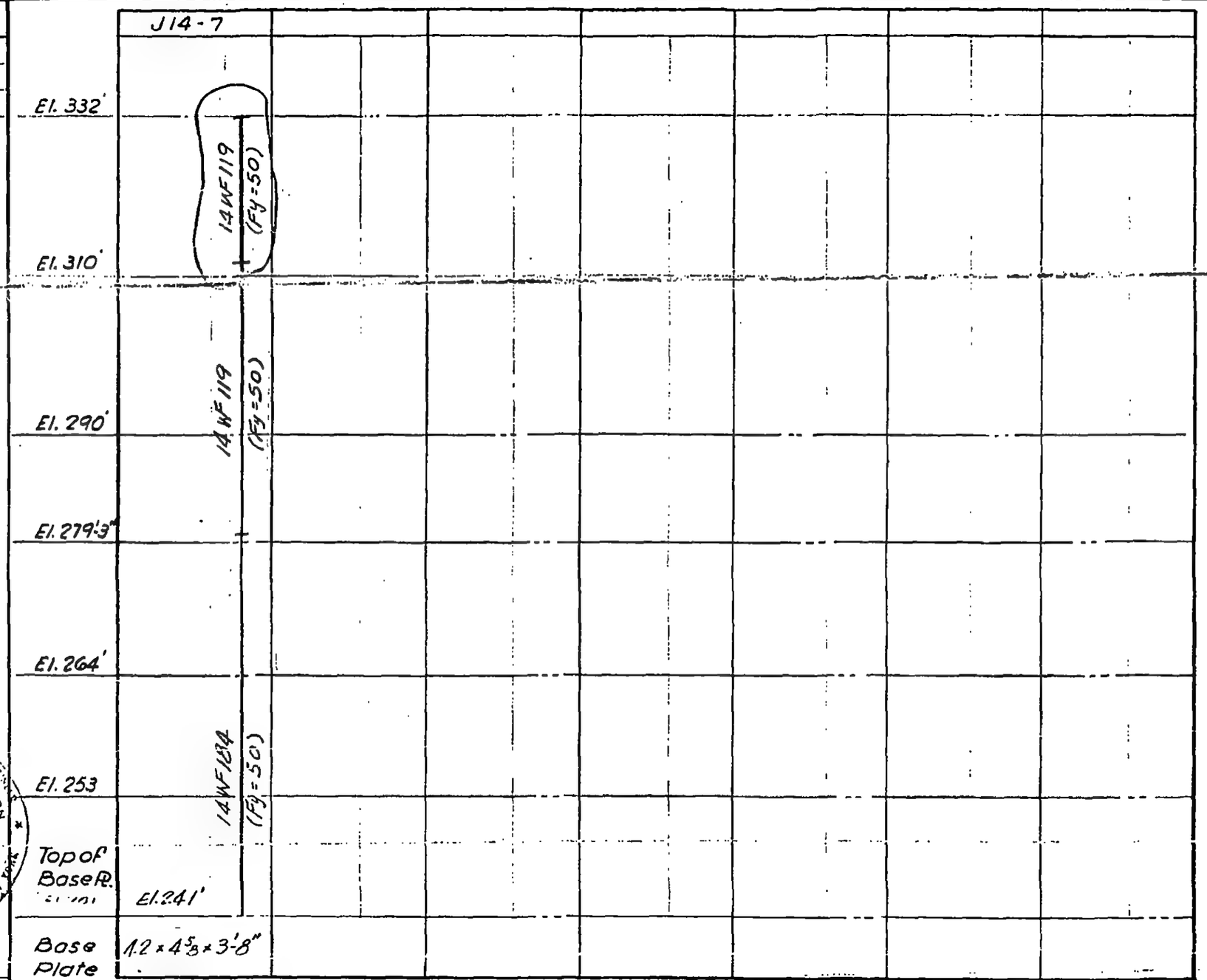

* Provide proper splice pls., bolt holes & finished col. top for future columns. Use upper col: one size smaller except as shown.
▲ See detail on 10-JK4-3 and 4.
■ Splice 3" above slab. See note on 10-JK2-2.
● See detail on 10-JK2-30.

LICENSED PROFESSIONAL ENGINEER LESLIE E. ROBERTSON No. 54360 UNIVERSITY OF THE STATE OF NEW YORK

DRAWN S.C.
REVIEWED R.T. & E.L.

10-J1-57

C

WORTHINGTON, SKILLING, HELLE & JACKSON — Civil & Structural Engineers

PROJECT: THE WORLD TRADE CENTER | TITLE: COLUMN SCHEDULE | DATE: 5-15-67

REVISIONS
1-13-69

	J14-8	J14-9	J14-10	J14-11	J14-12		
El. 332'							
El. 310'	14 WF 193 (Fy=50)	14 WF 264 (Fy=50)	14 WF 202 (Fy=50)	14 WF 202 (Fy=50)	14 WF 264 (Fy=50)		
El. 290'							
El. 279'3"							
El. 264'							
El. 253							
Top of Base Pl.							
Base Plate							

* Provide proper splice pls., bolt holes & finished col. top for future columns. Use upper col. one size smaller except as shown.
▲ See detail on 10-JK4-3 and 4.
■ Splice 3" above slab. See note on 10-JK2-2.
● See detail on 10-JK2-30.

10-J1-58

LICENSED PROFESSIONAL ENGINEER — LESLIE E. ROBERTSON — No. 34360 — STATE OF NEW YORK

DRAWN S.C.
REVIEWED R.T.-E.L.

C

WORTHINGTON, SKILLING, HELLE & JACKSON — Civil & Structural Engineers

PROJECT: THE WORLD TRADE CENTER | TITLE: COLUMN SCHEDULE | DATE: 5-15-67

REVISIONS
10-20-67
11-8-67

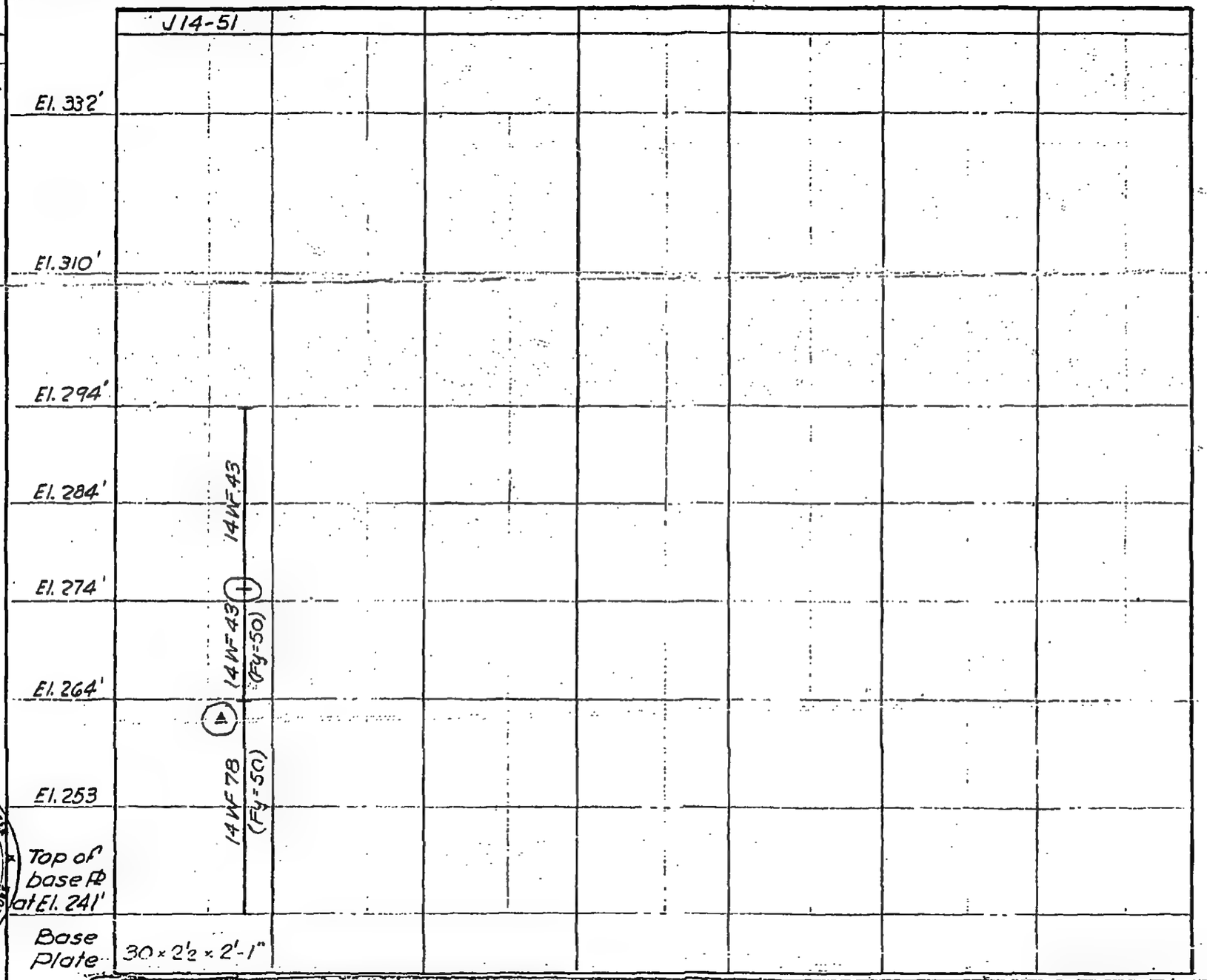

* Provide proper splice pls., bolt holes & finished col. top for future columns. Use upper col. one size smaller except as shown.
▲ See detail on 10-JK4-3 and 4.
■ Splice 3" above slab. See note on 10-JK2-2.
● See detail on 10-JK2-30.

10-J1-59

LICENSED PROFESSIONAL ENGINEER LESLIE E. ROBERTSON No. 34360 UNIVERSITY OF THE STATE OF NEW YORK

A

WORTHINGTON, SKILLING, HELLE & JACKSON — Civil & Structural Engineers

PROJECT: THE WORLD TRADE CENTER | TITLE: COLUMN SCHEDULE | DATE: 5-15-67

REVISIONS
10-20-67
11-8-67

	J15-1	J15-2	J15-3	J15-4	J15-5
El. 332'					
El. 310'					
Street level					
El. 294'	14 WF 68 (Fy=50)	14 WF 111 (Fy=50)	14 WF 136 (Fy=50)	14 WF 167 (Fy=50)	14 WF 87 (Fy=50)
El. 284'					
El. 274'	14 WF 84 (Fy=50)	14 WF 142 (Fy=50)	14 WF 167 (Fy=50)	14 WF 202 (Fy=50)	14 WF 111 (Fy=50)
El. 264'					
El. 253	14 WF 127 (Fy=50)	14 WF 219 (Fy=50)	14 WF 237 (Fy=50)	14 WF 314 (Fy=50)	14 WF 158 (Fy=50)
Top of base Pl at El. 241'					
Base Plate	34 × 3 3/8 × 3'-1"	46 × 4 3/4 × 4'-2"	46 × 4 7/8 × 4'-1"	54 × 5 1/2 × 4'-3"	38 × 3 3/4 = 3'-4"

* Provide proper splice pls., bolt holes & finished col. top for future columns. Use upper col. one size smaller except as shown.
▲ See detail on 10-JK4-3 and 4.
■ Splice 3" above slab. See note on 10-JK2-2.
● See detail on 10-JK2-30.

10-31-60

LICENSED PROFESSIONAL ENGINEER — LESLIE E. ROBERTSON — No. 34360 — UNIVERSITY OF THE STATE OF NEW YORK

A

WORTHINGTON, SKILLING, HELLE & JACKSON Civil & Structural Engineers

PROJECT THE WORLD TRADE CENTER | TITLE COLUMN SCHEDULE | DATE 5-15-67

REVISIONS
10-20-67
11-8-67

	J15-51
El. 332'	
El. 310'	
El. 294'	
El. 284'	14 WF 43
El. 274'	14 WF 43 (Fy=50) ①
El. 264'	
El. 253	14 WF 78 (Fy=50) ▲
Top of base Pl at El. 241'	
Base Plate	30 x 2½ = 2'-1"

* Provide proper splice pls., bolt holes & finished col. top for future columns. Line upper col. one size smaller except as shown.
▲ See detail on 10-JK4-3 and 4.
■ Splice 3" above slab. See note on 10-JK2-2.
● See detail on 10-JK2-30.

10-J1-C1

LICENSED PROFESSIONAL ENGINEER LESLIE E. ROBERTSON No. 34360 UNIVERSITY OF THE STATE OF NEW YORK

1040-2

A

WORTHINGTON, SKILLING, HELLE & JACKSON — Civil & Structural Engineers

PROJECT: THE WORLD TRADE CENTER | TITLE: COLUMN SCHEDULE | DATE: 5-15-67

REVISIONS
1-13-69

	J16-1	J16-2	J16-3	J16-4			
El. 332'							
El. 310'	14 WF 264 (Fy=50)	14 WF 202 (Fy=50)	14 WF 202 (Fy=50)	14 WF 264 (Fy=50)			
El. 290'							
El. 279'3"							
El. 264'							
El. 253							
Top of Base R.							
Base Plate							

LICENSED PROFESSIONAL ENGINEER — LESLIE E. ROBERTSON — No. 34360 — REGISTERED IN THE STATE OF NEW YORK

DRAWN S.C.
REVIEWED R.T. & E.L.

* Provide proper splice pls., bolt holes & finished col. top for future columns. Use upper col. one size smaller except as shown.
▲ See detail on 10-JK4-3 and 4.
■ Splice 3" above slab. See note on 10-JK2-2.
● See detail on 10-JK2-30.

10-J1-62

WORTHINGTON, SKILLING, HELLE & JACKSON Civil & Structural Engineers

PROJECT THE WORLD TRADE CENTER | TITLE COLUMN SCHEDULE | DATE 5-15-67

REVISIONS

1-13-69

	J16-51
El. 332'	
El. 310'	14 WF 87 (Fy=50)
El. 290'	
El. 279'-3"	
El. 264'	
El. 253	
Top of Base Pl.	
Base Plate	

* Provide proper splice pls., bolt holes & finished col. top for future columns. Use upper col. one size smaller except as shown.
▲ See detail on 10-JK4-3 and 4.
■ Splice 3" above slab. See note on 10-JK2-2.
● See detail on 10-JK2-30.

LICENSED PROFESSIONAL ENGINEER LESLIE E. ROBERTSON No. 34360 DIVISION OF THE STATE OF NEW YORK

DRAWN S.C.

REVIEWED R.T. & E.L.

10-J1-63

C

WORTHINGTON, SKILLING, HELLE & JACKSON — Civil & Structural Engineers

PROJECT: THE WORLD TRADE CENTER | TITLE: COLUMN SCHEDULE | DATE: 5-15-67

REVISIONS
10-20-67
11-8-67

	J17-1	J17-2	J17-3	J17-4	J17-5		
El. 332'							
El. 310'							
Street level							
El. 294'	14 WF 68 (Fy=50)	14 WF 111 (Fy=50)	14 WF 111 (Fy=50)	14 WF 167 (Fy=50)	14 WF 87 (Fy=50)		
El. 284'							
El. 274'	⊕	⊕	⊕	⊕	⊕		
El. 264'	14 WF 78 (Fy=50)	14 WF 136 (Fy=50)	14 WF 142 (Fy=50)	14 WF 202 (Fy=50)	14 WF 111 (Fy=50)		
El. 253	▲	▲	▲	▲	▲		
Top of base Pl at El. 241'	14 WF 119 (Fy=50)	14 WF 202 (Fy=50)	14 WF 211 (Fy=50)	14 WF 314 (Fy=50)	14 WF 158 (Fy=50)		
Base Plate	28 × 2 5/8 × 2'-4"	42 × 4 1/4 × 3'-6"	42 × 4 1/4 × 3'-10"	54 × 5 1/2 × 4'-3"	38 × 3 3/4 × 3'-4"		

LICENSED PROFESSIONAL ENGINEER — LESLIE E. ROBERTSON — No. 34360 — UNIVERSITY OF THE STATE OF NEW YORK

* Provide proper splice pls., bolt holes & finished col. top for future columns. Use upper col. one size smaller except as shown.
▲ See detail on 10-JK4-3 and 4.
■ Splice 3" above slab. See note on 10-JK2-2.
● See detail on 10-JK2-30.

10-11-64

WORTHINGTON, SKILLING, HELLE & JACKSON — Civil & Structural Engineers

PROJECT: THE WORLD TRADE CENTER | TITLE: COLUMN SCHEDULE | DATE: 5-15-67

REVISIONS
10-20-67
11-8-67

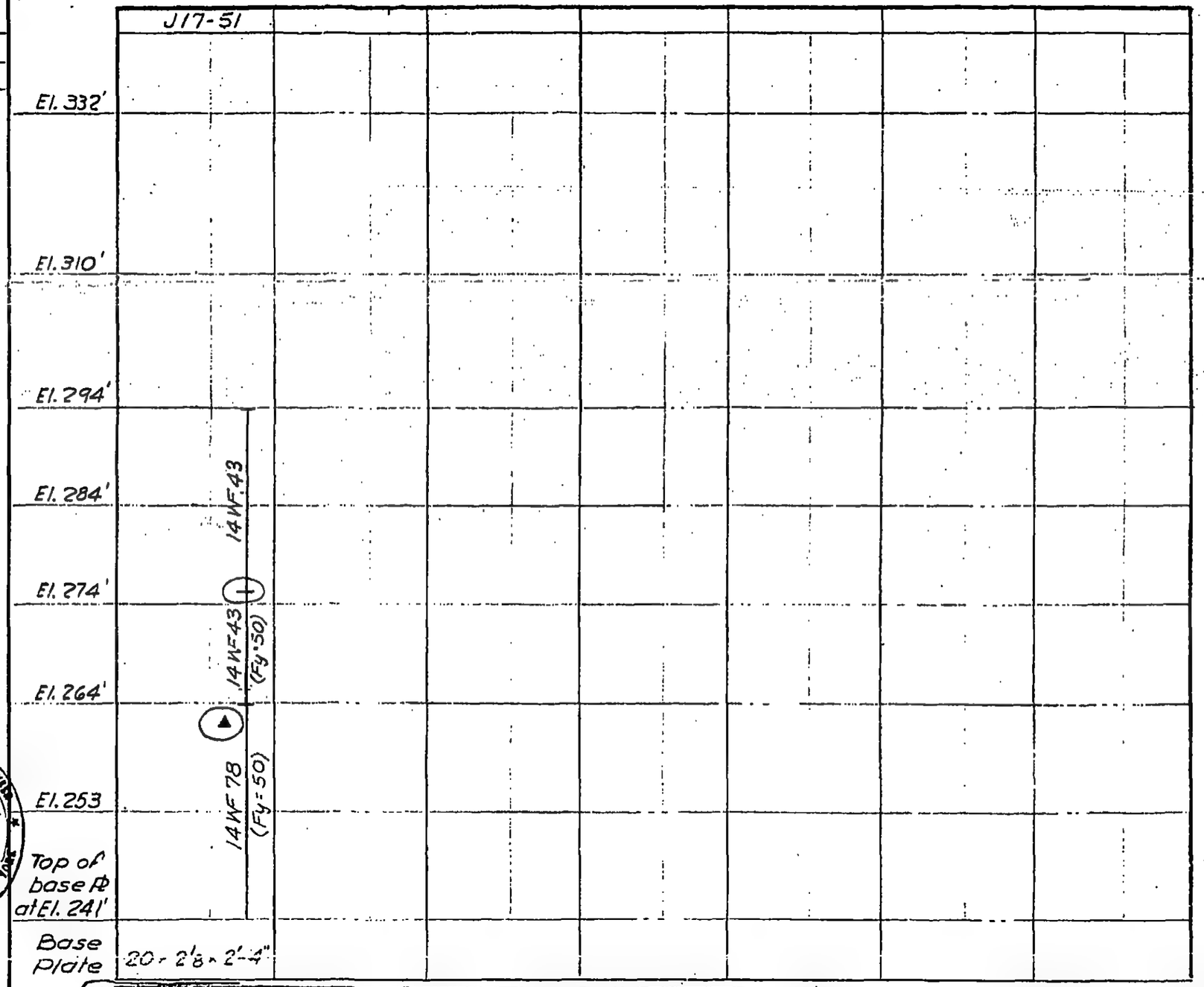

✱ Provide proper splice pls., bolt holes & finished col. top for future columns. Use upper col. one size smaller except as shown.
▲ See detail on 10-JK4-3 and 4.
■ (Splice 1" above slab.) See note on 10-JK2-2.
● See detail on 10-JK2-30.

10-J1-65

LICENSED PROFESSIONAL ENGINEER — LESLIE E. ROBERTSON — No. 34360 — UNIVERSITY OF THE STATE OF NEW YORK

A

WORTHINGTON, SKILLING, HELLE & JACKSON — Civil & Structural Engineers

PROJECT: THE WORLD TRADE CENTER | TITLE: COLUMN SCHEDULE | DATE: 5-15-67

REVISIONS
1-13-69

	J18-1	J18-2	J18-3	J18-4			
El. 332'							
El. 310'	14 WF 228 (Fy=50)	14 WF 84 (Fy=50)	14 WF 84 (Fy=50)	14 WF 228 (Fy=50)			
El. 290'							
El. 279'3"							
El. 264'							
El. 253							
Top of Base Pl.							
Base Plate							

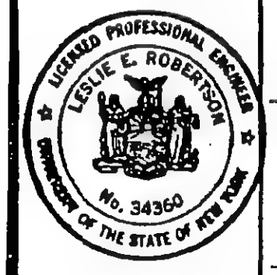

DRAWN S.C.
REVIEWED R.T. & E.L.

* Provide proper splice pls., bolt holes & finished col. top for future columns. Use upper col. one size smaller except as shown.
▲ See detail on 10-JK4-3 and 4.
■ Splice 3" above slab. See note on 10-JK2-2.
● See detail on 10-JK2-30.

10-J1-66

WORTHINGTON, SKILLING, HELLE & JACKSON — Civil & Structural Engineers

PROJECT: THE WORLD TRADE CENTER | TITLE: COLUMN SCHEDULE | DATE: 5-15-67

REVISIONS
1-13-69.

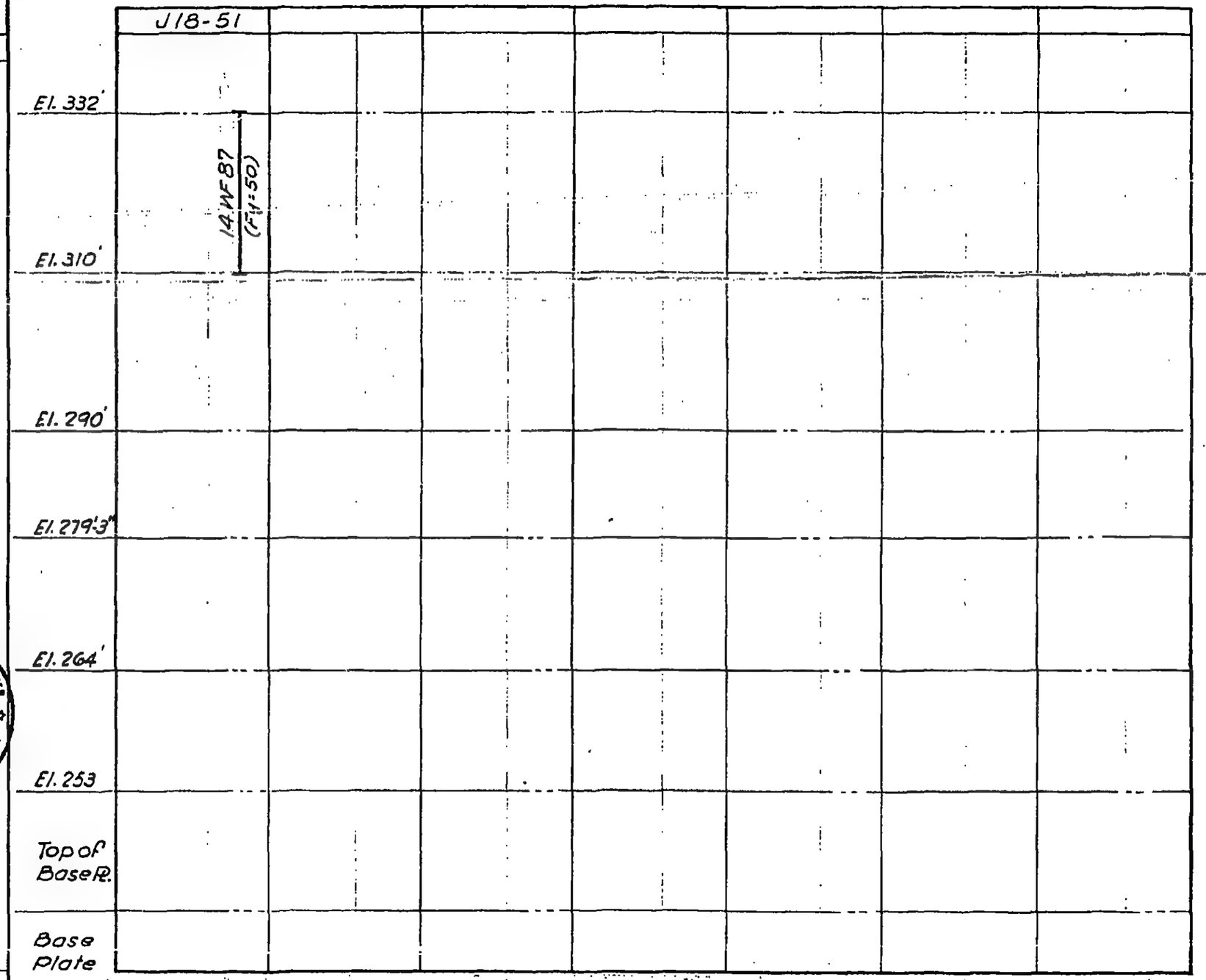

✱ Provide proper splice pls., bolt holes & finished col. top for future columns. Use upper col. one size smaller except as shown.
▲ See detail on 10-JK4-3 and 4.
■ Splice 3" above slab. See note on 10-JK2-2.
● See detail on 10-JK2-30.

LICENSED PROFESSIONAL ENGINEER — LESLIE E. ROBERTSON — No. 34360 — STATE OF NEW YORK

DRAWN: S.C.
REVIEWED: R.T. & E.L.

10-JK-67

WORTHINGTON, SKILLING, HELLE & JACKSON — Civil & Structural Engineers

PROJECT: THE WORLD TRADE CENTER | TITLE: COLUMN SCHEDULE | DATE: 5-15-67

REVISIONS
10-20-67
11-8-67

	J19-1	J19-2	J19-3	J19-4	J19-5
El. 332'					
El. 310'					
Street level					
El. 294'	14 WF 161 (Fy=50)	14 WF 87 (Fy=50)	14 WF 119 (Fy=50)	14 WF 167 (Fy=50)	14 WF 87 (Fy=50)
El. 284'					
El. 274'	⊕ 14 WF 68 (Fy=50)	⊕ 14 WF 111 (Fy=50)	⊕ 14 WF 142 (Fy=50)	⊕ 14 WF 202 (Fy=50)	⊕ 14 WF 103 (Fy=50)
El. 264'					
El. 253	▲ 14 WF 95 (Fy=50)	▲ 14 WF 158 (Fy=50)	▲ 14 WF 219 (Fy=50)	▲ 14 WF 314 (Fy=50)	▲ 14 WF 150 (Fy=50)
Top of base Pl at El. 241'					
Base Plate	32 × 2 3/4 × 2'-5"	38 × 3 3/4 × 3'-4"	46 × 4 3/4 × 4'-2"	48 × 5 1/2 × 4'-4"	38 × 3 7/8 × 3'-5"

LICENSED PROFESSIONAL ENGINEER — LESLIE E. ROBERTSON — No. 34360 — UNIVERSITY OF THE STATE OF NEW YORK

✱ Provide proper splice pls., bolt holes & finished col. top for future columns. Use upper col. one size smaller except as shown.
▲ See detail on 10-JK4-3 and 4.
■ Splice 3" above slab. See note on 10-JK2-2.
● See detail on 10-JK2-30.

10-11-66

WORTHINGTON, SKILLING, HELLE & JACKSON — Civil & Structural Engineers

PROJECT: THE WORLD TRADE CENTER | TITLE: COLUMN SCHEDULE | DATE: 5-15-67

REVISIONS
10-20-67
11-8-67

	J19-51
El. 332'	
El. 310'	
El. 294'	
El. 284'	14WF43
El. 274'	14WF43 (1) (Fy=50)
El. 264'	14WF43 (Fy=50)
El. 253	14WF78 (▲) (Fy=50)
Top of base Pl at El. 241'	
Base Plate	30 × 2½ × 2'-1"

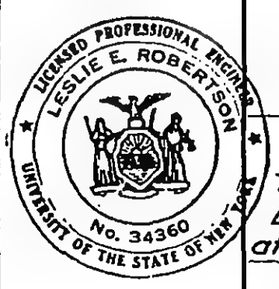

✱ Provide proper splice pls., bolt holes & finished col. top for future columns. Use upper col. one size smaller except as shown.
▲ See detail on 10-JK4-3 and 4.
■ Splice 3" above slab. See note on 10-JK2-2.
● See detail on 10-JK2-30.

10-J1-69

A

WORTHINGTON, SKILLING, HELLE & JACKSON Civil & Structural Engineers

PROJECT THE WORLD TRADE CENTER | TITLE COLUMN SCHEDULE | DATE 5-15-67

REVISIONS

1-13-69

	J20-1	J20-2	J20-3	J20-4			
El. 332'							
El. 310'	14 WF 228 (Fy=50)	14 WF 87 (Fy=50)	14 WF 87 (Fy=50)	14 WF 228 (Fy=50)			
El. 290'							
El. 279'-3"							
El. 264'							
El. 253							
Top of Base Pl.							
Base Plate							

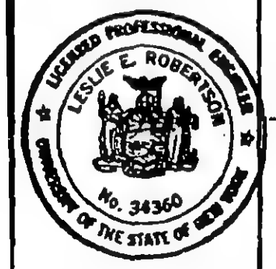

* Provide proper splice pls., bolt holes & finished col. top for future columns. Use upper col. one size smaller except as shown.
▲ See detail on 10-JK4-3 and 4.
■ Splice 3" above slab. See note on 10-JK2-2.
● See detail on 10-JK2-30.

DRAWN S.C.
REVIEWED R.T. & E.L.

10-J1-70

WORTHINGTON, SKILLING, HELLE & JACKSON — Civil & Structural Engineers

PROJECT: THE WORLD TRADE CENTER | TITLE: COLUMN SCHEDULE | DATE: 5-15-67

REVISIONS

1-13-69

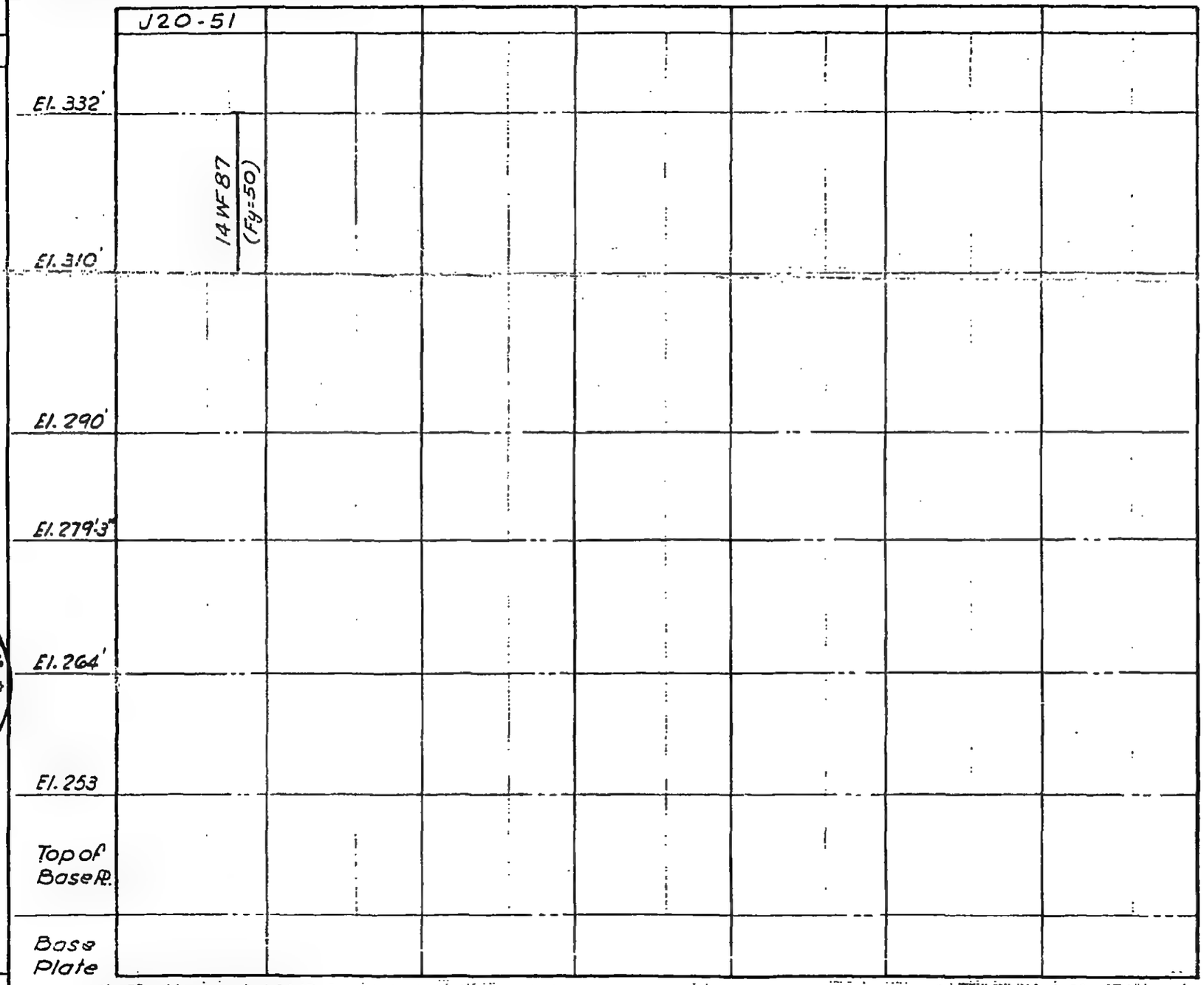

* Provide proper splice pls., bolt holes & finished col. top for future columns. Use upper col. one size smaller except as shown.
▲ See detail on 10-JK4-3 and 4.
■ Splice 3" above slab. See note on 10-JK2-2.
● See detail on 10-JK2-30.

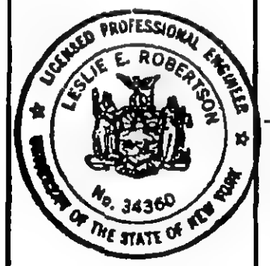

DRAWN S.C.

REVIEWED R.T. & E.L.

10-J1-71

WORTHINGTON, SKILLING, HELLE & JACKSON Civil & Structural Engineers

PROJECT THE WORLD TRADE CENTER | TITLE COLUMN SCHEDULE | DATE 5-15-67

REVISIONS
10-20-67
11-8-67

	J21-1	J21-2	J21-3	J21-4
El. 332'				
El. 310'				
Stress level				
El. 294'	14 WF 74 (Fy=50)	14 WF 121 (Fy=50)	14 WF 158 (Fy=50)	14 WF 84 (Fy=50)
El. 284'				
El. 274'	14 WF 87 (Fy=50)	14 WF 167 (Fy=50)	14 WF 184 (Fy=50)	14 WF 95 (Fy=50)
El. 264'				
El. 253	14 WF 127 (Fy=50)	14 WF 237 (Fy=50)	14 WF 287 (Fy=50)	14 WF 142 (Fy=50)
Top of base Pl at El. 241'				
Base Plate	34 × 3 3/8 × 3'-1"	46 × 4 7/8 × 4'-1"	48 × 5 1/4 × 4'-4"	38 × 3 3/4 × 3'-4"

LICENSED PROFESSIONAL ENGINEER LESLIE E. ROBERTSON No. 34360 UNIVERSITY OF THE STATE OF NEW YORK

* Provide proper splice pls., bolt holes & finished col. top for future columns. Use upper col. one size smaller except as shown.
▲ See detail on 10-JK4-3 and 4.
■ Splice 3" above slab. See note on 10-JK2-2.
● See detail on 10-JK2-30.

10-11-72

A

WORTHINGTON, SKILLING, HELLE & JACKSON Civil & Structural Engineers

PROJECT THE WORLD TRADE CENTER | TITLE COLUMN SCHEDULE | DATE 5-15-67

REVISIONS
10-20-67
11-8-67

	J21-51
El. 332'	
El. 310'	
El. 294'	
El. 284'	14 WF 43
El. 274'	14 WF 43 (Fy=50) ●
El. 264'	▲
El. 253	14 WF 78 (Fy=50)
Top of base Pl at El. 241'	
Base Plate	30 × 2½ × 2'-1"

* Provide proper splice pls., bolt holes & finished col. top for future columns. Use upper col. one size smaller except as shown.
▲ See detail on 10-JK4-3 and 4.
■ Splice 3" above slab. See note on 10-JK2-2.
● See detail on 10-JK2-30.

10-J1-73

LICENSED PROFESSIONAL ENGINEER LESLIE E. ROBERTSON No. 34360 UNIVERSITY OF THE STATE OF NEW YORK

WORTHINGTON, SKILLING, HELLE & JACKSON Civil & Structural Engineers

PROJECT THE WORLD TRADE CENTER | TITLE COLUMN SCHEDULE | DATE 5-15-67

REVISIONS

1-13-69

	J22-1	J22-2
El. 332'		
El. 310'	14 WF 87 (Fy=50)	14 WF 228 (Fy=50)
El. 290'		
El. 279'-3"		
El. 264'		
El. 253		
Top of Base Pl.		
Base Plate		

* Provide proper splice pls., bolt holes & finished col. top for future columns. Use upper col. one size smaller except as shown.
▲ See detail on 10-JK4-3 and -4.
■ Splice 3" above slab. See note on 10-JK2-2.
● See detail on 10-JK2-30.

LICENSED PROFESSIONAL ENGINEER LESLIE E. ROBERTSON No. 34360 STATE OF NEW YORK

DRAWN S.C.

REVIEWED R.T. & E.L.

10-J1-74

WORTHINGTON, SKILLING, HELLE & JACKSON — Civil & Structural Engineers

PROJECT: THE WORLD TRADE CENTER | TITLE: COLUMN SCHEDULE | DATE: 5-15-67

REVISIONS
10-20-67
11-8-67
1-13-69

	J23-1	J23-2	J23-3	J23-4	J23-5	J23-6	J23-7
El. 332'							
El. 310'					14WF87 (Fy=50)	14WF228 (Fy=50)	14WF111 (Fy=50)
Street level El. 294'	14WF68 (Fy=50)	14WF119 (Fy=50)	14WF167 (Fy=50)	14WF87 (Fy=50)			
El. 284'							
El. 274'							
El. 264'	14WF74 (Fy=50)	14WF142 (Fy=50)	14WF202 (Fy=50)	14WF111 (Fy=50)			
El. 253	▲ 14WF103 (Fy=50)	▲ 14WF219 (Fy=50)	▲ 14WF314 (Fy=50)	▲ 14WF158 (Fy=50)			
Top of base PL at El. 241'							
Base Plate	32 × 3 = 2'-9"	46 × 4¾ = 4'-2"	54 × 5½ = 4'-3"	38 × 3¾ = 2'-4"			

* Provide proper splice pls., bolt holes & finished col. top for future columns. Use upper col. one size smaller except as shown.
▲ See detail on 10-JK4-3 and 4.
■ Splice 3" above slab. See note on 10-JK2-2.
● See detail on 10-JK2-30.

DRAWN S.C.
REVIEWED R.T.A. E.L.

10-31-75

REGISTERED PROFESSIONAL ENGINEER — LESLIE E. ROBERTSON — No. 34960 — STATE OF NEW YORK

WORTHINGTON, SKILLING, HELLE & JACKSON — Civil & Structural Engineers

PROJECT: THE WORLD TRADE CENTER | TITLE: COLUMN SCHEDULE | DATE: 5-15-67

REVISIONS
10-20-67
11-8-67

	J23-51
El. 332'	
El. 310'	
El. 294'	
El. 284'	14WF43
El. 274'	14WF43 (Fy=50) ●
El. 264'	
El. 253	▲ 14WF78 (Fy=50)
Top of base Pl at El. 241'	
Base plate	30×2½×2'-1"

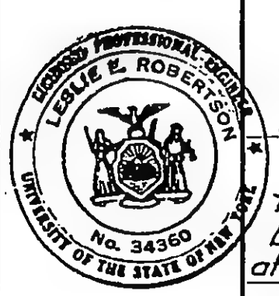

* Provide proper splice pls., bolt holes & finished col. top for future columns. Use upper col. one size smaller except as shown.
▲ See detail on 10-JK4-3 and 4.
■ Splice 1" above slab. See note on 10-JK2-2.
● See detail on 10-JK2-30.

10-11-76

WORTHINGTON, SKILLING, HELLE & JACKSON — Civil & Structural Engineers

PROJECT: THE WORLD TRADE CENTER | TITLE: COLUMN SCHEDULE | DATE: 5-15-67

REVISIONS
10-20-67
11-8-67

	J25-1	J25-2	J25-3	J25-4
El. 332'				
El. 310'				
Street level				
El. 294'	14 WF 68 (Fy=50)	14 WF 95 (Fy=50)	14 WF 167 (Fy=50)	14 WF 87 (Fy=50)
El. 284'				
El. 274'	14 WF 78 (Fy=50)	14 WF 119 (Fy=50)	14 WF 202 (Fy=50)	14 WF 111 (Fy=50)
El. 264'				
El. 253	14 WF 119 (Fy=50)	14 WF 193 (Fy=50)	14 WF 314 (Fy=50)	14 WF 158 (Fy=50)
Top of base Pl at El. 241'				
Base plate	28 × $2\frac{5}{8}$ × 2'-7"	42 × $1\frac{1}{4}$ × 3'-10"	54 × $5\frac{1}{2}$ × 4'-3"	38 × $3\frac{3}{4}$ × 3'-4"

* Provide proper splice pls., bolt holes & finished col. top for future columns. Use upper col. one size smaller except as shown.
▲ See detail on 10-JK4-3 and 4.
■ Splice 3" above slab. See note on 10-JK2-2.
● See detail on 10-JK2-30.

10-J1-77

LICENSED PROFESSIONAL ENGINEER LESLIE E. ROBERTSON No. 34360 UNIVERSITY OF THE STATE OF NEW YORK

WORTHINGTON, SKILLING, HELLE & JACKSON Civil & Structural Engineers

PROJECT THE WORLD TRADE CENTER | TITLE COLUMN SCHEDULE | DATE 5-15-67

REVISIONS
10-20-67
11-8-67

	J25-51
El. 332'	
El. 310'	
El. 294'	14 WF 53 (Fy=50)
El. 284'	
El. 274'	14 WF 68 (Fy=50) ①
El. 264'	
El. 253	14 WF 95 (Fy=50) ▲
Top of base Pl at El. 241'	
Base Plate	26×2⅝×2'-7"

* Provide proper splice pls., bolt holes & finished col.-top for future columns. Use upper col. one size smaller except as shown.
▲ See detail on 10-JK4-3 and 4.
■ Splice 3" above slab. See note on 10-JK2-2.
● See detail on 10-JK2-30.

10-J1-78

LICENSED PROFESSIONAL ENGINEER LESLIE E. ROBERTSON No. 34360 UNIVERSITY OF THE STATE OF NEW YORK

A

WORTHINGTON, SKILLING, HELLE & JACKSON — Civil & Structural Engineers

PROJECT: THE WORLD TRADE CENTER | TITLE: COLUMN SCHEDULE | DATE: 5-15-67

REVISIONS: 5-1-68

	J70-1	J70-2
El. 332'		
El. 310'		
El. 290'	14 WF 142 (Fy=50)	14 WF 136 (Fy=50)
El. 279'-3"		
El. 264'	14 WF 370 (Fy=50)	14 WF 314 (Fy=50)
El. 253	▲ 14 WF 370 (Fy=50)	▲ 14 WF 314 (Fy=50)
Top of Base Pl.	El. 241'	El. 241'
Base Plate	47 × 5¼ × 4'-2"	42 × 4⅝ × 3'-9"

* Provide proper splice pls., bolt holes & finished col. top for future columns. Use upper col. one size smaller except as shown.
▲ See detail on 10-JK4-3 and 4.
■ Splice 3" above slab. See note on 10-JK2-2.
● See detail on 10-JK2-30.

10-J1-79

LICENSED PROFESSIONAL ENGINEER — LESLIE E. ROBERTSON — No. 34300 — UNIVERSITY OF THE STATE OF NEW YORK

C

WORTHINGTON, SKILLING, HELLE & JACKSON Civil & Structural Engineers

PROJECT THE WORLD TRADE CENTER | TITLE COLUMN SCHEDULE | DATE 5-15-67

REVISIONS

5-1-68

	J70-51	J70-52	J70-53				
El. 332'							
El. 310'							
El. 290'	14WF87 (Fy=50)	14WF119 (Fy=50)	14WF95 (Fy=50)				
El. 279'3"							
El. 264'	14WF228 (Fy=50)	14WF314 (Fy=50)	14WF237 (Fy=50)				
El. 253	▲ 14WF228 (Fy=50)	▲ 14WF314 (Fy=50)	▲ 14WF237 (Fy=50)				
Top of Base R.	El. 241'	El. 241'	El. 241'				
Base Plate	36 × 3 3/8 × 3'-2"	41 × 4 1/2 × 3'-8"	36 × 3 3/8 × 3'-2"				

✱ Provide proper splice pls., bolt holes & finished col. top for future columns. Use upper col. one size smaller except as shown.
▲ See detail on 10-JK4-3 and 4.
■ Splice 3" above slab. See note on 10-JK2-2.
● See detail on 10-JK2-30.

10-J1-80

LICENSED PROFESSIONAL ENGINEER LESLIE E. ROBERTSON No. 34360 UNIVERSITY OF THE STATE OF NEW YORK

WORTHINGTON, SKILLING, HELLE & JACKSON — Civil & Structural Engineers

PROJECT: THE WORLD TRADE CENTER | TITLE: COLUMN SCHEDULE | DATE: 5-15-67

REVISIONS: 5-1-68

	J71-1	J71-2	J71-3	J71-4	J71-5	J71-6	J71-7
El. 332'							
El. 310'							
El. 290'		14WF111 (Fy=50)	14WF127 (Fy=50)	14WF127 (Fy=50)	14WF136 (Fy=50)	14WF176 (Fy=50)	14WF167 (Fy=50)
El. 279'-3"							
El. 264'		14WF314 (Fy=50)	14WF342 (Fy=50)	14WF314 (Fy=50)	14WF342 (Fy=50)	14WF426 (Fy=50)	14WF398 (Fy=50)
El. 253	14WF61 (Fy=42)	▲ 14WF314 (Fy=50)	▲ 14WF342 (Fy=50)	▲ 14WF314 (Fy=50)	▲ 14WF342 (Fy=50)	▲ 14WF426 (Fy=50)	▲ 14WF398 (Fy=50)
Top of Base Pl.	El. 241'	El. 241'	El. 241'	El. 241'	El. 241'	El. 241'	El. 241'
Base Plate	20 × 1¾ × 2'-0"	40 × 1 × 3'-7"	44 × 4⅞ × 3'-10"	42 × 4⅝ × 3'-9"	44 × 5 × 3'-11"	50 × 5⅝ × 4'-5"	48 × 5⅝ × 4'-4"

LICENSED PROFESSIONAL ENGINEER — LESLIE E. ROBERTSON — No. 34360 — UNIVERSITY OF THE STATE OF NEW YORK

* Provide proper splice pls., bolt holes & finished col. top for future columns. Use upper col. one size smaller except as shown.
▲ See detail on 10-JK4-3 and 4.
■ Splice 3" above slab. See note on 10-JK2-2.
● See detail on 10-JK2-30.

10-J1-81

WORTHINGTON, SKILLING, HELLE & JACKSON — Civil & Structural Engineers

PROJECT: THE WORLD TRADE CENTER | TITLE: COLUMN SCHEDULE | DATE: 5-15-67

REVISIONS
5-1-68
6-28-68

	J72-1	J72-2
El. 332'		
El. 310'		
El. 290'	Part of Truss JT-9	Part of Truss JT-10
El. 274'	Part of Truss JT-8 See dwg. 14 WF 342 (Fy=50)	14 WF 665 (Fy=46)
El. 264'		
Top of base Pl.	14 WF 665 (Fy=46) El. 243'-4"	10-JK4-4B 14 WF 665 (Fy=46) El. 243'-4"
Base Plate	69 × 8½ × 6'-4"	64 × 7¾ × 5'-10"

* Provide proper splice pls., bolt holes & finished col. top for future columns. Use upper col. one size smaller except as shown.
▲ See detail on 10-JK4-3 and 4..
■ Splice 3" above slab. See note on 10-JK2-2.
● See detail on 10-JK2-30.

10-J1-83

LICENSED PROFESSIONAL ENGINEER LESLIE E. ROBERTSON No. 34360 UNIVERSITY OF THE STATE OF NEW YORK

WORTHINGTON, SKILLING, HELLE & JACKSON — Civil & Structural Engineers

PROJECT: THE WORLD TRADE CENTER | TITLE: COLUMN SCHEDULE | DATE: 5-15-67

REVISIONS
5-1-68
6-7-68
10-15-68

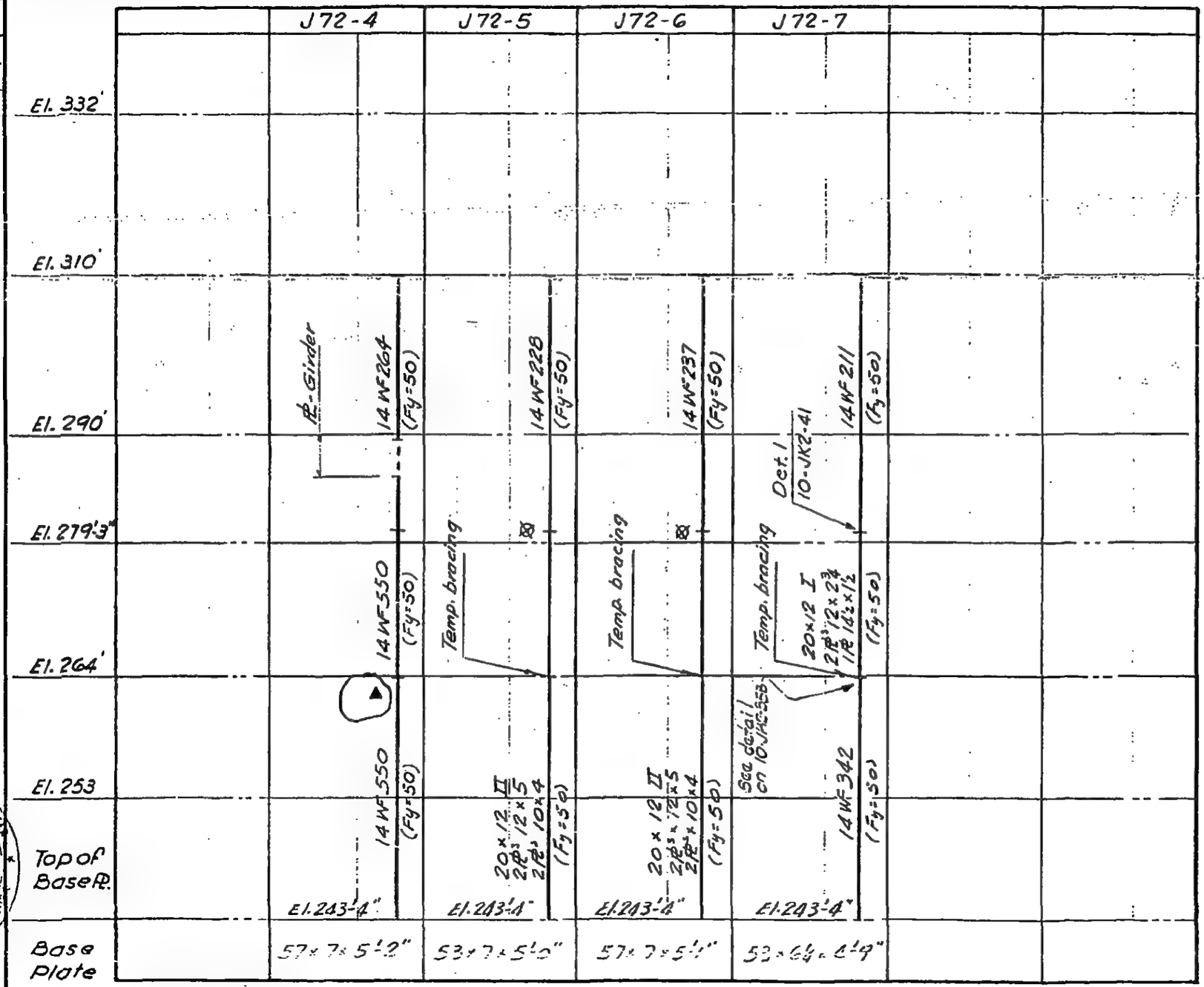

LICENSED PROFESSIONAL ENGINEER — LESLIE E. ROBERTSON — No. 34260 — UNIVERSITY OF THE STATE OF NEW YORK

* Provide proper splice pls., bolt holes & finished col. top for future columns. Use upper col. one size smaller except as shown.
▲ See detail on 10-JK4-3 and 4.
■ Splice 3" above slab. See note on 10-JK2-2.
● See detail on 10-JK2-30.
⊠ Splice detail, see 10-JK2-35A

10-J1-84

WORTHINGTON, SKILLING, HELLE & JACKSON — Civil & Structural Engineers

PROJECT: THE WORLD TRADE CENTER | TITLE: COLUMN SCHEDULE | DATE: 5-15-67

REVISIONS: 5-1-68; 6-7-68

	J72-8	J72-9	J72-10	J72-11	J72-12		
El. 332'							
El. 310'							
El. 290'	Det. 1 10-JK2-41 14WF 211 (Fy=50)	Det. 2 10-JK2-41 14WF 219 (Fy=50)	Det. 3 10-JK2-41 14WF 167 (Fy=50)	Det. 2 10-JK2-41 14WF 219 (Fy=50)	Det. 4 10-JK2-41 14WF 142 (Fy=50)		
El. 279'-3"	Temp. bracing 20×12 I 2 Pls 12×2¾ 1 Pl 14½×1½ (Fy=50)	Temp. bracing 20×12 I 2 Pls 12×2¾ 1 Pl 14½×1½ (Fy=50)	Temp. bracing 20×12 I 2 Pls 12×2½ 1 Pl 15×1 (Fy=50)	Temp. bracing 20×12 I 2 Pls 12×2¾ 1 Pl 14½×1½ (Fy=50)	Temp. bracing 20×12 I 2 Pls 12×2 1 Pl 16×1 (Fy=50)		
El. 264'							
El. 253	Sec 10-JK2-355 14WF 342 (Fy=50)	Sec 10-JK2-356 14WF 370 (Fy=50)	Sec 10-JK2-355 14WF 287 (Fy=50)	Sec 10-JK2-356 14WF 370 (Fy=50)	Sec 10-JK2-356 14WF 264 (Fy=50)		
Top of Base Pl.	El. 243'-4"	El. 243'-4"	El. 243'-4"	El. 243'-4"	El. 243'-4"		
Base Plate	53×6¼×4'-9"	54×6¼×4'-9"	49"×5⅝×4'-3"	54×6¼×4'-9"	45×5⅛×4'-0"		

* Provide proper splice pls., bolt holes & finished col. top for future columns. Use upper col. one size smaller except as shown.
▲ See detail on 10-JK4-3 and 4.
■ Splice 3" above slab. See note on 10-JK2-2.
● See detail on 10-JK2-30.

10-J1-85

LICENSED PROFESSIONAL ENGINEER LESLIE E. ROBERTSON No. 84260 UNIVERSITY OF THE STATE OF NEW YORK

WORTHINGTON, SKILLING, HELLE & JACKSON — Civil & Structural Engineers

PROJECT: THE WORLD TRADE CENTER | TITLE: COLUMN SCHEDULE | DATE: 5-15-67

REVISIONS
5-1-68
6-7-68
6-28-68

	J73-1	J73-2
El. 332'		
El. 310'	Part of Truss JT-9	Part of Truss JT-10
El. 290'	14 WF 455 (Fy=50)	14 WF 43 (Fy=42)
El. 274'	14 WF 455 (Fy=50)	14 WF 426 (Fy=50)
El. 264'	14 WF 455 (Fy=50)	14 WF 426 (Fy=50)
Top of base Pl.	See detail 10-JK4-4B El. 243'-4"	See detail 10-JK4-4B El. 243'-4"
Base Plate	55 = 6½ = 5'-0"	53 = 6 = 4'-9"

LICENSED PROFESSIONAL ENGINEER LESLIE E. ROBERTSON No. 34360 UNIVERSITY OF THE STATE OF NEW YORK

✱ Provide proper splice pls., bolt holes & finished col. top for future columns. Use upper col. one size smaller except as shown.
▲ See detail on 10-JK4-3 and 4.
■ Splice 3" above slab. See note on 10-JK2-2.
● See detail on 10-JK2-30.

10-J1-86

WORTHINGTON, SKILLING, HELLE & JACKSON — Civil & Structural Engineers

PROJECT: THE WORLD TRADE CENTER | TITLE: COLUMN SCHEDULE | DATE: 5-15-67

REVISIONS

5-1-68
6-7-68
10-15-68

	J73-4	J73-5	J73-6	J73-7		
El. 332'						
El. 310'						
El. 290'						
El. 279'-3"	14 WF 193 (Fy=50)	Temp. bracing 20x12 I - 2 Pls 12x5 - 1 Pl 10x3 (Fy=50)	Temp. bracing 20x12 I - 2 Pls 12x5 - 1 Pl 10x3 (Fy=50)	14 WF 87 (Fy=50)	14 WF 78 (Fy=42)	
El. 264'	▲				20x12 I 2 Pls 12x1½ 1 Pl 17x¾ (Fy=50)	
Top of Base Pl.	14 WF 193 (Fy=50) El. 243'-4"	El. 243'-4"	El. 243'-4"	Temp. bracing See detail on 10JK2-35B 14 WF 176 (Fy=50) El. 243'-4"		
Base Plate	35x3½x3'-2"	32x3½x2'-11"	40x5x3'-7"	39x3¾x3'-5"		

✱ Provide proper splice pls., bolt holes & finished col. top for future columns. Use upper col. one size smaller except as shown.
▲ See detail on 10-JK4-3 and 4.
■ Splice 3" above slab. See note on 10-JK2-2.
● See detail on 10-JK2-30.

10-J1-87

LICENSED PROFESSIONAL ENGINEER LESLIE E. ROBERTSON No. 94860 UNIVERSITY OF THE STATE OF NEW YORK

WORTHINGTON, SKILLING, HELLE & JACKSON — Civil & Structural Engineers

PROJECT: THE WORLD TRADE CENTER | TITLE: COLUMN SCHEDULE | DATE: 5-15-67

REVISIONS

5-1-68
6-7-68
10-15-68

	J73-8	J73-9	J73-10	J73-11	J73-12		
El. 332'							
El. 310'							
El. 290'							
El. 279'-3"	14 WF 87 (Fy=50)	14 WF 111 (Fy=50)		14 WF 111 (Fy=50)	14 WF 87 (Fy=50)		
El. 264'	Temp. bracing 20×12 I, 2 PLs 12×1½, 1 PL 17×¾ (Fy=50)	Temp. bracing 20×12 I, 2 PLs 12×1½, 1 PL 17×¾ (Fy=50)		Temp. bracing 20×12 I, 2 PLs 12×1½, 1 PL 17×¾ (Fy=50)	Temp. bracing 20×12 I, 2 PLs 12×1½, 1 PL 17×¾ (Fy=50)		
El. 253	Sec 10-JK2-35B 14 WF 176 (Fy=50)	Sec 10-JK2-35B 14 WF 193 (Fy=50)	▲ 14 WF 87 (Fy=50)	Sec 10-JK2-35B 14 WF 193 (Fy=50)	Sec 10-JK2-35B 14 WF 176 (Fy=50)		
Top of Base Pl.	El. 243'-4"	El. 243'-4"	El. 243'-4"	El. 243'-4"	El. 243'-4"		
Base Plate	37×3¾×3'-4"	38×3⅞×3'-5"	20×2⅛×2'-4"	38×3⅞×3'-5"	37×3¾×3'-4"		

✱ Provide proper splice pls., bolt holes & finished col. top for future columns. Use upper col. one size smaller except as shown.
▲ See detail on 10-JK4-3 and 4.
■ Splice 3" above slab. See note on 10-JK2-2.
● See detail on 10-JK2-30.

10-J1-88

LICENSED PROFESSIONAL ENGINEER LESLIE E. ROBERTSON NO. 54850 UNIVERSITY OF THE STATE OF NEW YORK

TCI-1040-LERA, I

WORTHINGTON, SKILLING, HELLE & JACKSON — Civil & Structural Engineers

PROJECT: THE WORLD TRADE CENTER | TITLE: COLUMN SCHEDULE | DATE: 5-15-67

REVISIONS
5-1-68

	J74-1
El. 332'	
El. 310'	
El. 290'	
El. 274'	℄ Girder 14WF68 (Fy=42)
El. 264'	14WF314 (Fy=50)
Top of base ℄	▲ 14WF314 (Fy=50)
	El. 243'-4"
Base Plate	47 × 5'4 × 4'-2"

* Provide proper splice pls., bolt holes & finished col. top for future columns. Use upper col. one size smaller except as shown.
▲ See detail on 10-JK4-3 and 4..
■ Splice 3" above slab. See note on 10-JK2-2.
● See detail on 10-JK2-30.

10-J1-89

LICENSED PROFESSIONAL ENGINEER — LESLIE E. ROBERTSON — No. 94300 — UNIVERSITY OF THE STATE OF NEW YORK

1040-1, 2

WORTHINGTON, SKILLING, HELLE & JACKSON — Civil & Structural Engineers

PROJECT: THE WORLD TRADE CENTER | TITLE: COLUMN SCHEDULE | DATE: 5-15-67

REVISIONS
5-1-68
6-7-68
10-15-68

	J74-2	J74-3	J74-4	J74-5	J74-6		
El. 332'							
El. 310'							
El. 290'			14WF314 (Fy=50)	14 WF 264 (Fy=50)	Det. 5 10-JK2-41 14 WF 264 (Fy=50)		
El. 279'-3"			⊠ Temp. bracing	⊠ Temp. bracing	⊠ Temp. bracing		
El. 274'		Bott. of PL Girder			20×12 II 2PL 12×3 1PL 14×2 (Fy=50)		
El. 264'	Bott. of PL Girder ▲ 14WF550 (Fy=50)	▲ 14WF665 +PL 15×3 (B.S.) (Fy=46)					
El. 253		Temp. bracing 14WF665 +PL 15×3 (B.S.) (Fy=46)	20×12 II 2PL 14×5 2PL 10×4 (Fy=50)	20×12 II 2PL 12×5 2PL 10×4 (Fy=50)	See detail on 10-JK2-35A 14WF398 (Fy=50)		
Top of Base PL.	El. 243'-4"	El. 243'-4"	El. 243'-4"	El. 243'-4"	El. 243'-4"		
Base Plate	59×7×5'-5"	74×9×7'-4"	64×8¾×5'-9"	57×7¾×5'-1"	57×7×5'-1"		

* Provide proper splice pls., bolt holes & finished col. top for future columns. Use upper col. one size smaller except as shown.
▲ See detail on 10-JK4-3 and 4.
■ Splice 3" above slab. See note on 10-JK2-2.
● See detail on 10-JK2-30.
⊠ Splice detail, see 10-JK2-35A.

10-J1-90

LICENSED PROFESSIONAL ENGINEER LESLIE E. ROBERTSON No. 34260 STATE OF NEW YORK UNIVERSITY

C

WORTHINGTON, SKILLING, HELLE & JACKSON — Civil & Structural Engineers

PROJECT: THE WORLD TRADE CENTER | TITLE: COLUMN SCHEDULE | DATE: 5-15-67

REVISIONS
5-1-68
6-7-68

	J74-7	J74-8	J74-9	J74-10	J74-11		
El. 332'							
El. 310'							
El. 290'	Det. 5 10-JK2-41 14 WF 264 (Fy=50)	Det. 1 10-JK2-41 14 WF 211 (Fy=50)	Det. 3 10-JK2-41 14 WF 167 (Fy=50)	Det. 3 10-JK2-41 14 WF 167 (Fy=50)	Det. 1 10-JK2-41 14 WF 211 (Fy=50)		
El. 279'-3"	Temp. bracing 20×12 I 2 PL 12×3 1 PL 14×2 (Fy=50)	Temp. bracing 20×12 I 2 PL 12×2¾ 1 PL 14½×1½ (Fy=50)	Temp. bracing 20×12 I 2 PL 12×2½ 1 PL 15×1 (Fy=50)	Temp. bracing 20×12 I 2 PL 12×2½ 1 PL 15×1 (Fy=50)	Temp. bracing 20×12 I 2 PL 12×2¾ 1 PL 14½×1½ (Fy=50)		
El. 264'	Sec 10-JK2-356 14 WF 398 (Fy=50)	Sec 10-JK2-356 14 WF 342 (Fy=50)	Sec 10-JK2-356 14 WF 287 (Fy=50)	Sec 10-JK2-358 14 WF 314 (Fy=50)	Sec 10-JK2-358 14 WF 342 (Fy=50)		
El. 253							
Top of Base R.	El. 243'-4"	El. 243'-4"	El. 243'-4"	El. 243'-4"	El. 243'-4"		
Base Plate	56×6½×5'-0"	53×6¼×4'-9"	49×5⅝×4'-3"	48×5⅝×4'-4"	53×6⅛×4'-9"		

* Provide proper splice pls., bolt holes & finished col. top for future columns. Use upper col. one size smaller except as shown.
▲ See detail on 10-JK4-3 and 4.
■ Splice 3" above slab. See note on 10-JK2-2.
● See detail on 10-JK2-30.

LICENSED PROFESSIONAL ENGINEER — LESLIE E. ROBERTSON — No. 34460 — UNIVERSITY OF THE STATE OF NEW YORK

10-J1-91

WORTHINGTON, SKILLING, HELLE & JACKSON — Civil & Structural Engineers

PROJECT: THE WORLD TRADE CENTER | TITLE: COLUMN SCHEDULE | DATE: 5-15-67

REVISIONS
5-1-68
6-7-68
6-28-68

	J75-1	J75-2	J75-3	J-75-4	J75-5	J75-6	
El. 332'							
El. 310'							
El. 290'			14WF228 (Fy=50)	14WF228 (Fy=50)	14WF211 (Fy=50)	14WF150 (Fy=50)	
El. 279'3"		14WF136 (Fy=50)		Det. 6 10-JK2-41	Det. 7 10-JK2-41	Det. 8 10-JK2-41	
El. 274'	Temp. bracing	Temp. bracing	Temp bracing	Temp bracing	Temp bracing	Temp bracing	
El. 264'	Bottr. of 12 Girder 14WF398 (Fy=50)	12 Girder 14WF398 (Fy=50)	14WF342 (Fy=50)			20x12 I 2 PL 12x2 1 PL 16x1 (Fy=50)	
El. 253	17x17 I 2 PL 17x4 9x2½ 1 PL (Fy=50)	17, 17 I 2 PL 17x4 9x2½ 1 PL (Fy=50)	14WF426 (Fy=50)	20x12 I 2 PL 12x5 1 PL 10x3 (Fy=50)	20x12 I 2 PL 12x5 1 PL 10x3 (Fy=50)	See detail on 10-JK2-35B 14WF287 (Fy=50)	
Top of Base PL.	El. 243'-4"	El. 243'-4"	El. 243'-4"	El. 243'-4"	El. 243'-4"	El. 243'-4"	
Base Plate	69 x 8½ x 6'-4"	69 x 9 x 6'-4"	59 x 7¼ x 5'-5"	55 x 7 x 4'-11"	53 x 7 x 4'-9"	47 x 5⅜ x 4'-2"	

* Provide proper splice pls., bolt holes & finished col. top for future columns. Use upper col. one size smaller except as shown.
▲ See detail on 10-JK4-3 and 4.
■ Splice 3" above slab. See note on 10-JK2-2.
● See detail on 10-JK2-30.

10-J1-92

LICENSED LESLIE E. ROBERTSON NO. 3426 UNIVERSITY OF THE STATE OF NEW YORK

WORTHINGTON, SKILLING, HELLE & JACKSON — Civil & Structural Engineers

PROJECT THE WORLD TRADE CENTER | TITLE COLUMN SCHEDULE | DATE 5-15-67

REVISIONS
5-1-68
6-7-68

	J75-7	J75-8	J75-9	J75-10	J75-11	J-75-12
El. 332'						
El. 310'						
El. 290'	Det. 9 10-JK2.41 14WF136 (Fy=50)	14WF264 (Fy=50)		14WF142 (Fy=50)		14WF142 (Fy=50)
El. 279'-3"						
El. 264'	Temp. bracing 20×12 I 2 PL 12×2 1 PL 16×1 (Fy=50)	20×12 I 2 PL 12×3 1 PL 14×2 (Fy=50)				
El. 253						
Top of Base Pl.	See 10-JK2.35B 14WF264 (Fy=50) El. 243'-4"	Splice detail Similar to 10-JK2-35B (No shear head) Temp. bracing 14WF426 (Fy=50) El. 243'-4"	14WF78 (Fy=50) El. 243'-4"		14WF68 (Fy=50) El. 243'-4"	
Base Plate	47×5¼×4'-2"	57×7×5'-2"	18×1½×1'-10"		14×1×1'-7"	

* Provide proper splice pls., bolt holes & finished col. top for future columns. Use upper col. one size smaller except as shown.
▲ See detail on 10-JK4-3 and 4.
■ Splice 3" above slab. See note on 10-JK2-2.
● See detail on 10-JK2-30.

10-J1-93

LICENSED PROFESSIONAL ENGINEER LESLIE E. ROBERTSON No. 34260 UNIVERSITY OF THE STATE OF NEW YORK

C

WORTHINGTON, SKILLING, HELLE & JACKSON Civil & Structural Engineers

PROJECT THE WORLD TRADE CENTER | TITLE COLUMN SCHEDULE | DATE 5-15-67

REVISIONS
5-1-68
6-7-68

	J75-13	J75-14	J75-15				
El. 332'							
El. 310'							
El. 290'							
El. 279'3"		14WF246 (Fy=50)	14WF142 (Fy=50)				
El. 264'		20×12 I 2 PL 12×3 1 PL 14×2 (Fy=50)	Temp. bracing 20×12 I 2 PL 12×2 1 PL 16×1 (Fy=50)				
El. 253		Splice detail similar to 12-JK2-35B (No shear head). Temp bracing 14WF426 (Fy=50)	See 10-JK2-35B= 14WF287 (Fy=50)				
Top of Base Pl.	14WF78 (Fy=50) El. 243'-4"	El. 243'-4"	El. 243'-4"				
Base Plate	12×1½×1'-0"	57×7×5'-2"	47×5½×4'-2"				

* Provide proper splice pls., bolt holes & finished col. top for future columns. Use upper col. one size smaller except as shown.
▲ See detail on 10-JK4-3 and 4.
■ Splice 3" above slab. See note on 10-JK2-2.
● See detail on 10-JK2-30.

10-J1-94

LICENSED PROFESSIONAL ENGINEER LESLIE E. ROBERTSON No. 34260 STATE OF NEW YORK UNIVERSITY OF THE STATE OF NEW YORK

WORTHINGTON, SKILLING, HELLE & JACKSON — Civil & Structural Engineers

PROJECT: THE WORLD TRADE CENTER | TITLE: COLUMN SCHEDULE | DATE: 5-15-67

REVISIONS

5-1-68
6-7-68
6-28-68

	J75-51	J75-52	J75-53				
El. 332'							
El. 310'							
El. 290'							
El. 279'-3"							
El. 264'							
Top of Base Pl.	14WF 74 (Fy=42) ▲ 14WF 78 (Fy=42) El. 243'-4"	Temp. bracing 1 Pl 16x1 20x12I-2 Pls 12x2-1 (Fy=50) El. 243'-4"	Temp. bracing 1 Pl 16x1 20x12I-2 Pls 12x2-1 (Fy=50) El. 243'-4"				
Base Plate	21 × 2 × 1'-9"	24 × 2'2 × 2'-4"	32 × 3'2 × 2'-11"				

* Provide proper splice pls., bolt holes & finished col. top for future columns. Use upper col. one size smaller except as shown.
▲ See detail on 10-JK4-3 and 4.
■ Splice 3" above slab. See note on 10-JK2-2.
● See detail on 10-JK2-30.

10-J1-95

LICENSED PROFESSIONAL ENGINEER LESLIE E. ROBERTSON No. 34360 UNIVERSITY OF THE STATE OF NEW YORK

WORTHINGTON, SKILLING, HELLE & JACKSON — Civil & Structural Engineers

PROJECT: THE WORLD TRADE CENTER | TITLE: COLUMN SCHEDULE | DATE: 5-15-67

REVISIONS
5-1-68

	J76-2	J76-3	J76-4	J76-5	J76-6		
El. 332'							
El. 310'							
El. 290'	14 WF 111 (Fy=50)	14 WF 111 (Fy=50)	14 WF 95 (Fy=50)	14 WF 95 (Fy=50)	14 WF 111 (Fy=50)		
El. 279'-3"							
El. 264'	14 WF 246 (Fy=50)	℄ Girder 14 WF 136 (Fy=50)		14 WF 237 (Fy=50)	14 WF 287 (Fy=50)		
El. 253	▲ 14 WF 246 (Fy=50)	14 WF 193 (Fy=50)		▲ 14 WF 237 (Fy=50)	▲ 14 WF 287 (Fy=50)		
Top of Base Pl.	El. 243'-4"	El. 243'-4"		El. 243'-4"	El. 243'-4"		
Base Plate	33 × 3 × 3'-0"	39 × 3¾ × 3'-5"		35 × 3½ × 3'-2"	40 × 4 × 3'-6"		

* Provide proper splice pls., bolt holes & finished col. top for future columns. Use upper col. one size smaller except as shown.
▲ See detail on 10-JK4-3 and 4.
■ Splice 3" above slab. See note on 10-JK2-2.
● See detail on 10-JK2-30.

10-J1-97

LICENSED PROFESSIONAL ENGINEER — LESLIE E. ROBERTSON — No. 34360 — UNIVERSITY OF THE STATE OF NEW YORK

C

WORTHINGTON, SKILLING, HELLE & JACKSON — Civil & Structural Engineers

PROJECT: THE WORLD TRADE CENTER | TITLE: COLUMN SCHEDULE | DATE: 5-15-67

REVISIONS
5-1-68
9-13-68

	J76-51	J76-52	J76-53
El. 332'			
El. 310'			
El. 290'			
El. 279'-3"			
El. 264'	Ft. Girder 14WF87 (Fy=50)	Bott. of girder	Bott. of girder
El. 253	14WF111 (Fy=50)	14WF68 (Fy=50)	14WF68 (Fy=50)
Top of Base Pl.	El. 243'-4"	El. 243'-4"	El. 243'-4"
Base Plate	28 × 2¾ × 2'-6"	18 × 1¾ × 1'-10"	18 × 1¾ × 1'-10"

* Provide proper splice pls., bolt holes & finished col. top for future columns. Use upper col. one size smaller except as shown.
▲ See detail on 10-JK4-3 and 4.
■ Splice 3" above slab. See note on 10-JK2-2.
● See detail on 10-JK2-30.

10-J1-99

LICENSED PROFESSIONAL ENGINEER — LESLIE E. ROBERTSON — No. 54360 — UNIVERSITY OF THE STATE OF NEW YORK

WORTHINGTON, SKILLING, HELLE & JACKSON — Civil & Structural Engineers

PROJECT: THE WORLD TRADE CENTER | TITLE: COLUMN SCHEDULE | DATE: 5-15-67

REVISIONS
1-13-69

	K26-1	K26-2	K26-3	K26-4	K26-5	K26-6	K26-7
El. 332'							
El. 310'	14 WF 202 (Fy=50)	14 WF 264 (Fy=50)	14 WF 202 (Fy=50)	14 WF 202 (Fy=50)	14 WF 264 (Fy=50)	14 WF 202 (Fy=50)	14 WF 314 (Fy=50)
El. 290'							
El. 279'3"							
El. 264'							
El. 253							
Top of Base Pl.							
Base Plate							

* Provide proper splice pls., bolt holes & finished col. top for future columns. Use upper col. one size smaller except as shown.
▲ See detail on 10-JK4-3 and 4.
■ Splice 3" above slab. See note on 10-JK2-2.
● See detail on 10-JK2-30.

LICENSED PROFESSIONAL ENGINEER — LESLIE E. ROBERTSON — No. 34360 — REGISTERED IN THE STATE OF NEW YORK

DRAWN S.C.
REVIEWED R.T. & E.L.

10-K1-201

WORTHINGTON, SKILLING, HELLE & JACKSON — Civil & Structural Engineers

PROJECT: THE WORLD TRADE CENTER | TITLE: COLUMN SCHEDULE | DATE: 5-15-67

REVISIONS
10-20-67
11-8-67

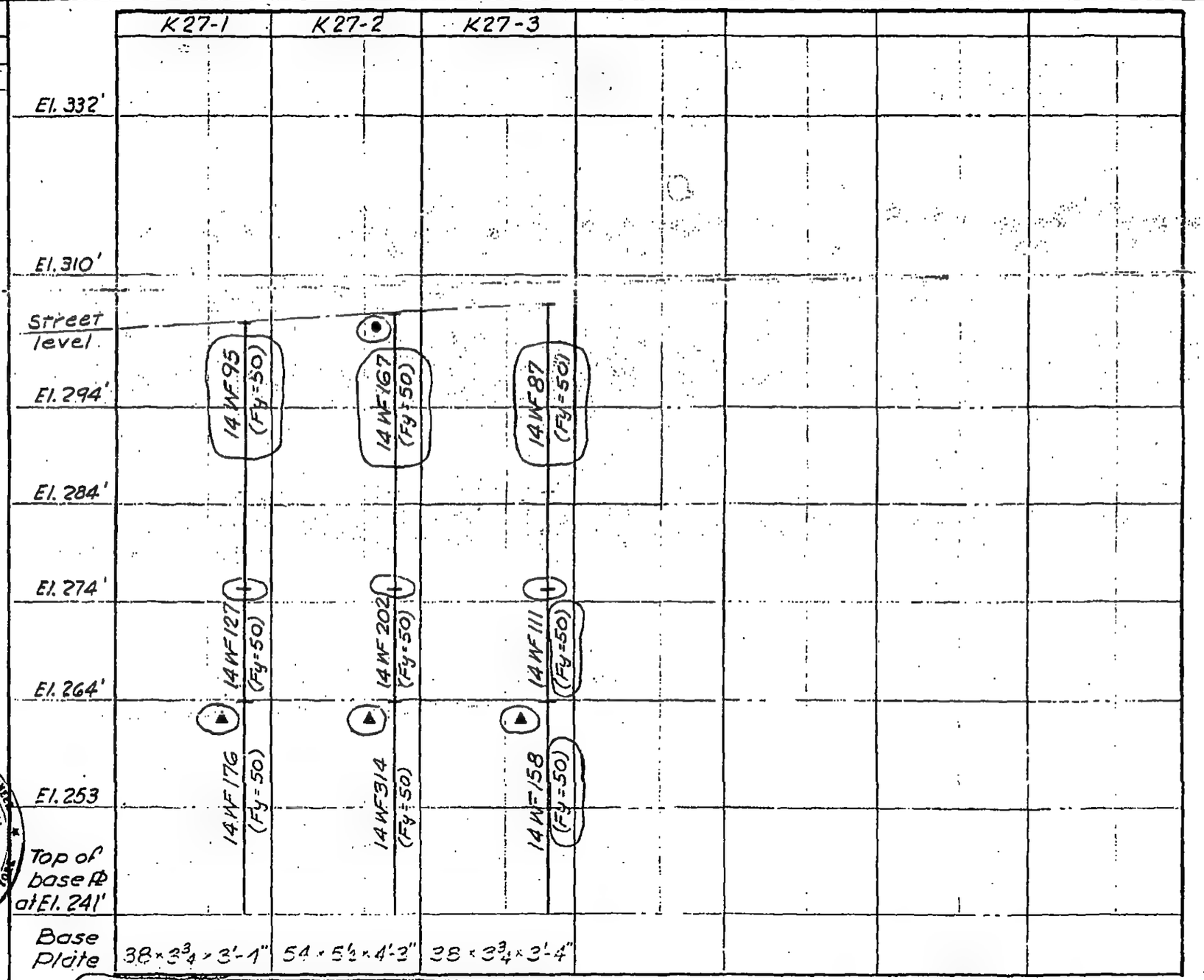

LICENSED PROFESSIONAL ENGINEER
LESLIE E. ROBERTSON
No. 34360
UNIVERSITY OF THE STATE OF NEW YORK

* Provide proper splice pls., bolt holes & finished col. top for future columns. Use upper col. one size smaller except as shown.
▲ See detail on 10-JK4-3 and 4.
■ Splice 3" above slab. See note on 10-JK2-2.
● See detail on 10-JK2-30.

10-K1-202

A

WORTHINGTON, SKILLING, HELLE & JACKSON — Civil & Structural Engineers

PROJECT: THE WORLD TRADE CENTER | TITLE: COLUMN SCHEDULE | DATE: 5-15-67

REVISIONS
1-13-69

	K28-1	K28-2	K28-3	K28-4	K28-5	K28-6	K28-7
El. 332'							
El. 310'	14 WF 202 (Fy=50)	14 WF 264 (Fy=50)	14 WF 202 (Fy=50)	14 WF 202 (Fy=50)	14 WF 264 (Fy=50)	14 WF 202 (Fy=50)	14 WF 264 (Fy=50)
El. 290'							
El. 279'3"							
El. 264'							
El. 253							
Top of Base Pl.							
Base Plate							

* Provide proper splice pls., bolt holes & finished col. top for future columns. Use upper col. one size smaller except as shown.
▲ See detail on 10-JK4-3 and 4.
■ Splice 3" above slab. See note on 10-JK2-2.
● See detail on 10-JK2-30.

LICENSED PROFESSIONAL ENGINEER — LESLIE E. ROBERTSON — No. 34360 — UNIVERSITY OF THE STATE OF NEW YORK

DRAWN S.C.
REVIEWED R.T. & E.L.

10-K1-203

C

WORTHINGTON, SKILLING, HELLE & JACKSON — Civil & Structural Engineers

PROJECT: THE WORLD TRADE CENTER | TITLE: COLUMN SCHEDULE | DATE: 5-15-67

REVISIONS
10-20-67
11-8-67
12-13-67
6-7-68

	K29-1	K29-2	K29-3	K29-4
El. 332'				
El. 310'				
Street level				
El. 294'	14 WF 119 (Fy=50)	14 WF 158 (Fy=50)	14 WF 142 (Fy=50)	14 WF 127 (Fy=50)
El. 284'				
El. 274'				
El. 264'	14 WF 136 (Fy=50)	14 WF 193 (Fy=50)	14 WF 184 (Fy=50)	14 WF 398 (Fy=50)
El. 253	14 WF 211 (Fy=50)	14 WF 314 (Fy=50)	14 WF 264 (Fy=50)	
Top of base Pl at El. 241'				
Base Plate	42 × 4'2 × 3'-5"	46 × 4'2 × 4'-1"	44 × 4'2 × 3'-10"	42 × 4 × 3'-3"

* Provide proper splice pls., bolt holes & finished col. top for future columns. Use upper col. one size smaller except as shown.
▲ See detail on 10-JK4-3 and 4.
■ Splice 3" above slab. See note on 10-JK2-2.
● See detail on 10-JK2-30.

10-K1-204

LICENSED PROFESSIONAL ENGINEER — LESLIE E. ROBERTSON — No. 34360 — UNIVERSITY OF THE STATE OF NEW YORK

A

WORTHINGTON, SKILLING, HELLE & JACKSON — Civil & Structural Engineers

PROJECT: THE WORLD TRADE CENTER | TITLE: COLUMN SCHEDULE | DATE: 5-15-67

REVISIONS
10-20-67
11-8-67
4-7-72

	K29-51	K29-52	K29-53
El. 332'			
	14 WF 74	14 WF 74	14 WF 74
El. 310'			
	(See detail on dwg. 10-JK2-31)		
El. 294'			
El. 284'			
El. 274'			
El. 264'			
El. 253			
Top of base Pl at El. 241'			
Base Plate			

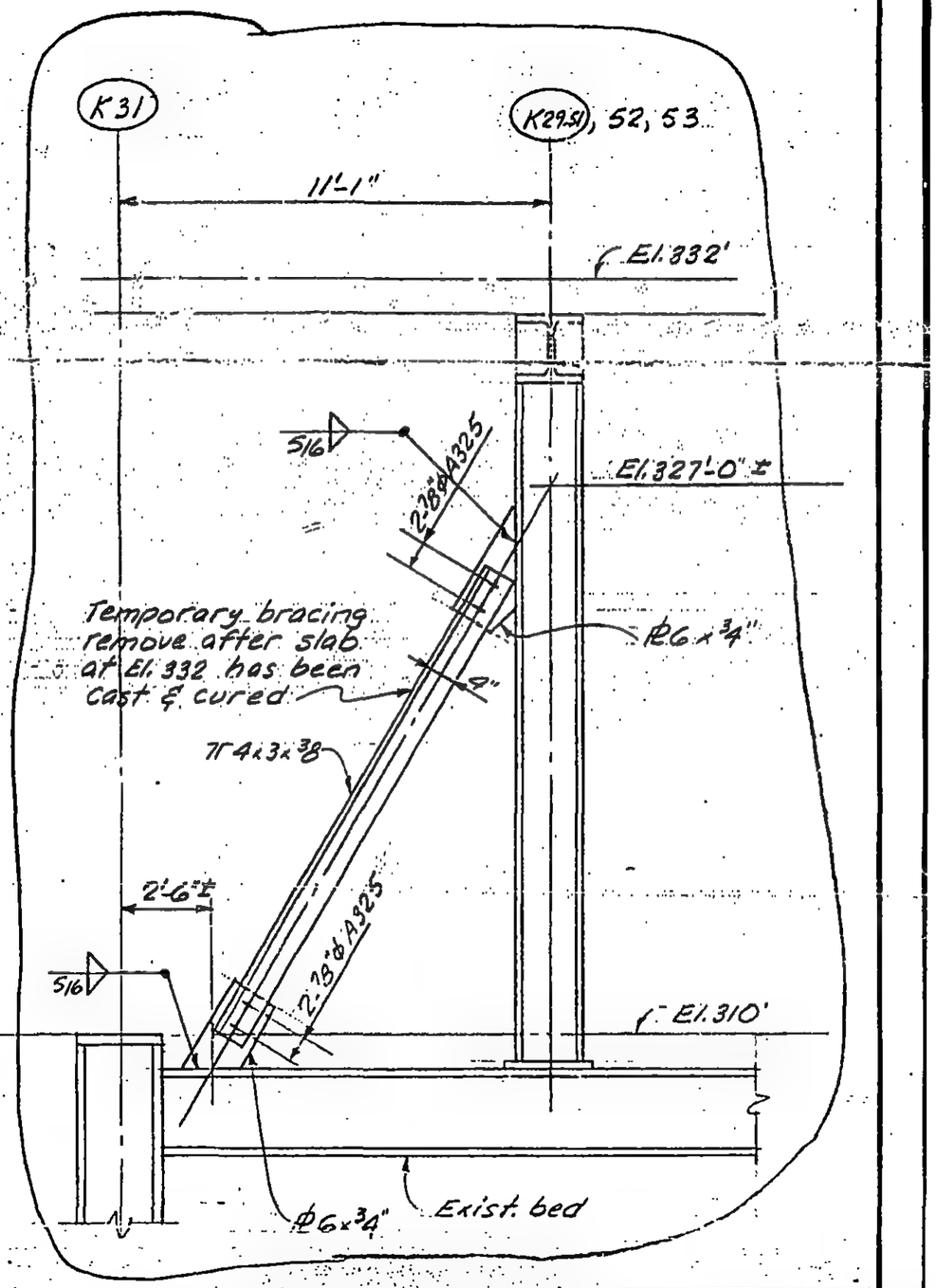

LICENSED PROFESSIONAL ENGINEER
LESLIE E. ROBERTSON
No. 34360
UNIVERSITY OF THE STATE OF NEW YORK

DRAWN S.C.
Reviewed

10-K1-205

WORTHINGTON, SKILLING, HELLE & JACKSON — Civil & Structural Engineers

PROJECT: THE WORLD TRADE CENTER | TITLE: COLUMN SCHEDULE | DATE: 5-15-67

REVISIONS
1-13-69

	K30-1	K30-2	K30-3	K30-4	K30-5	K30-6	K30-7
El. 332'							
El. 310'	14 WF 84 (Fy-50)	14 WF 228 (Fy-50)	14 WF 84 (Fy-50)	14 WF 84 (Fy-50)	14 WF 228 (Fy-50)	14 WF 84 (Fy-50)	14 WF 228 (Fy-50)
El. 290'							
El. 279'-3"							
El. 264'							
El. 253							
Top of Base Pl.							
Base Plate							

LICENSED PROFESSIONAL ENGINEER — LESLIE E. ROBERTSON — No. 34360 — STATE OF NEW YORK

DRAWN S.C.
REVIEWED R.T. & E.L.

✱ Provide proper splice pls., bolt holes & finished col. top for future columns. Use upper col. one size smaller except as shown.
▲ See detail on 10-JK4-3 and 4.
■ Splice 3" above slab. See note on 10-JK2-2.
● See detail on 10-JK2-30.

10-K1-206

C

WORTHINGTON, SKILLING, HELLE & JACKSON — Civil & Structural Engineers

PROJECT: THE WORLD TRADE CENTER | TITLE: COLUMN SCHEDULE | DATE: 5-15-67

REVISIONS
10-20-67
11-8-67
12-23-71
1-15-72
11-27-72

	K31-1	K31-2	K31-3	K31-4	K31-5	K31-6	K31-7
El. 332'							12-JK2-181
El. 310'			See Dwg. Book 13		See D.B. 13	See D.B. 13	14 WF 370 (Fy=50)
Street level	14 WF 111 (Fy=50)	14 WF 184 (Fy=50)	14 WF 264 (Fy=50)		14 WF 426 (Fy=50)	See 19-1053 for new cover ℄ 14 WF 398 (Fy=50)	14 WF 398 (Fy=50)
El. 294'							
El. 284'							
El. 274'	14 WF 127 (Fy=50)	14 WF 246 (Fy=50)	14 WF 320 (Fy=50)		14 WF 320 + ℄ 23×3 (B.S.) (Fy=42)	14 WF 320 + ℄ 23×2⅞ (B.S.) (Fy=42)	14 WF 320 + ℄ 23×2⅞ (B.S.) (Fy=42)
El. 264'							
El. 253	▲ 14 WF 202 (Fy=50)	▲ 14 WF 370 (Fy=50)	▲ 14 WF 455 (Fy=50)	14 WF 84 (Fy=50)			
Top of base ℄ at El. 241'							
Base Plate	40×3¾×5'-1"	54×5⅞×4'-3"	62×7×4'-9"	20×2⅛×2'-4"	60×7×5'-6"	60×7×5'-5"	60×7×5'-6"

* Provide proper splice pls., bolt holes & finished col. top for future columns. Use upper col. one size smaller except as shown.
▲ See detail on 10-JK4-3 and 4.
■ Splice 3" above slab. See note on 10-JK2-2.
● See detail on 10-JK2-30.

LICENSED PROFESSIONAL ENGINEER — LESLIE E. ROBERTSON — No. 34360 — UNIVERSITY OF THE STATE OF NEW YORK

DRAWN: S.C.
REVIEWED: E.L.

10-K1-207

WORTHINGTON, SKILLING, HELLE & JACKSON — Civil & Structural Engineers

PROJECT: THE WORLD TRADE CENTER | TITLE: COLUMN SCHEDULE | DATE: 5-15-67

REVISIONS
10-20-67
11-8-67
6-7-68
11-5-68
12-3-68
10-14-69

	K31-8	K31-9	K31-10	K31-11	K31-12	K31-5A
El. 332'						
El. 310'	14 WF 136 (Fy=50) ■	14 WF 150 (Fy=50) ■	14 WF 95 (Fy=50) ■	●		
El. 294'	14 WF 176 (Fy=50)	14 WF 176 (Fy=50)	14 WF 184 (Fy=50)	14 WF 150 (Fy=50)		
El. 284'	—	—	—	—	14 WF 61 (Fy=42)	
El. 279'-3"					—	
El. 274'						
El. 264'	14 WF 550 (Fy=50)	14 WF 550 (Fy=50)	14 WF 550 (Fy=50)	14 WF 500 (Fy=50)		
El. 257'-0"					14 WF 111 (Fy=50)	
El. 253						14 WF 68 (Fy=50)
Top of base Pl at El. 241'						
Base Plate	54 × 5½ × 4'-3"	54 × 5½ × 4'-3"	46 × 4¾ × 4'-2"	38 × 3¾ × 3'-4"	30 × 3 × 2'-0"	25 × 2½ × 2'-6"

LICENSED PROFESSIONAL ENGINEER — LESLIE E. ROBERTSON — No. 34360 — UNIVERSITY OF THE STATE OF NEW YORK

DRAWN S.C.
REVIEWED E.L.

* Provide proper splice pls., bolt holes & finished col. top for future columns. Use upper col. one size smaller except as shown.
▲ See detail on 10-JK4-3 and 4.
■ Splice 3" above slab. See note on 10-JK2-2.
● See detail on 10-JK2-10.

10-KI-208

WORTHINGTON, SKILLING, HELLE & JACKSON — Civil & Structural Engineers

PROJECT: THE WORLD TRADE CENTER | TITLE: COLUMN SCHEDULE | DATE: 5-15-67

REVISIONS
10-20-67
11-8-67

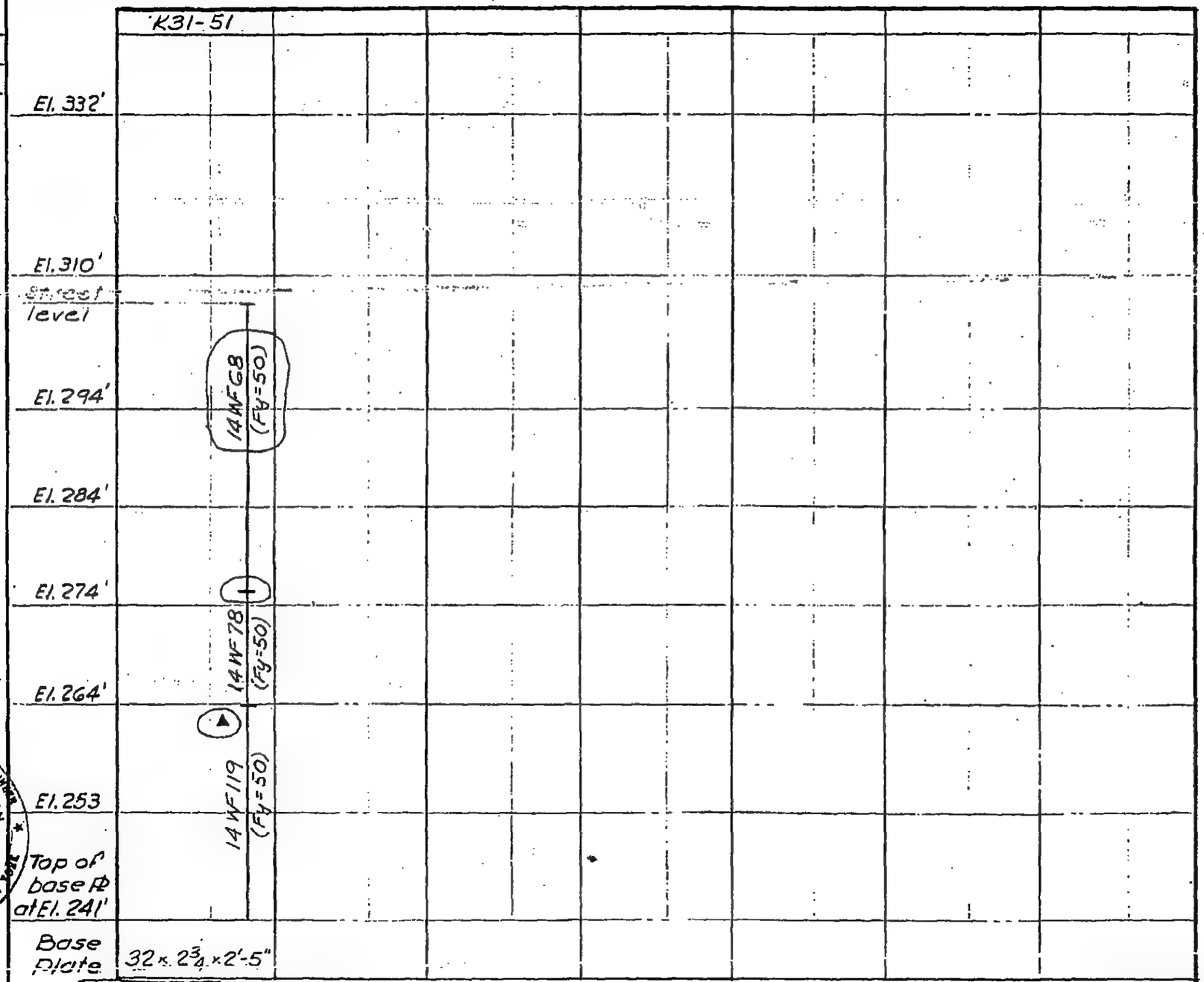

* Provide proper splice pls., bolt holes & finished col. top for future columns. - Use upper col. one size smaller except as shown.
▲ See detail on 10-JK4-3 and 4.
■ Splice 3" above slab. See note on 10-JK2-2.
● See detail on 10-JK2-30.

10-K1-209

LICENSED PROFESSIONAL ENGINEER — LESLIE E. ROBERTSON — No. 34360 — UNIVERSITY OF THE STATE OF NEW YORK

A

WORTHINGTON, SKILLING, HELLE & JACKSON — Civil & Structural Engineers

PROJECT: THE WORLD TRADE CENTER | TITLE: COLUMN SCHEDULE | DATE: 5-15-67

REVISIONS
1-13-69

	K33-1	K33-2	K33-3	K33-4	K33-5	K33-6	K33-7
El. 332'							
El. 310'	14 WF 87 (Fy=50)	14 WF 228 (Fy=50)	14 WF 87 (Fy=50)	14 WF 87 (Fy=50)	14 WF 228 (Fy=50)	14 WF 87 (Fy=50)	14 WF 228 (Fy=50)
El. 290'							
El. 279'-3"							
El. 264'							
El. 253							
Top of Base Pl.							
Base Plate							

* Provide proper splice pls., bolt holes & finished col. top for future columns. Use upper col. one size smaller except as shown.
▲ See detail on 10-JK4-3 and 4.
■ Splice 3" above slab. See note on 10-JK2-2.
● See detail on 10-JK2-30.

LICENSED PROFESSIONAL ENGINEER — LESLIE E. ROBERTSON — No. 34360 — REGISTERED IN THE STATE OF NEW YORK

DRAWN S.C.
REVIEWED R.T. & E.L.

10-K1-210

C

WORTHINGTON, SKILLING, HELLE & JACKSON — Civil & Structural Engineers

PROJECT: THE WORLD TRADE CENTER | TITLE: COLUMN SCHEDULE | DATE: 5-15-67

REVISIONS
10-20-67
11-8-67
12-23-71
1-15-72
11-27-72

	K35-1	K35-2	K35-3	K35-4	K-35-5	K35-6	K35-7
El. 332'							12-JK2-181
El. 310'		* See Dwg. Book 13		* See DB 13	* See DB 13	* See DB. 13.	* 14 WF 264 (Fy=50)
Level	14 WF 142 (Fy=50)	14 WF 158 (Fy=50)		See 19-1053 for new cover pl. 14 WF 264 (Fy=50)	See 19-1053 for new cover pl. 14 WF 426 (Fy=50)	See 19-1053 for new cover pl. 14 WF 398 (Fy=50)	14 WF 264 (Fy=50)
El. 294'							
El. 284'							
El. 274'	14 WF 176 (Fy=50)	14 WF 176 (Fy=50)		14 WF 730 (Fy=46)	14 WF 320 + PL 23 × 2⅞ (B.S.) (Fy=42)	14 WF 320 + PL 23 × 2⅞ (B.S.) (Fy=42)	14 WF 730 (Fy=46)
El. 264'							
El. 253	▲ 14 WF 314 (Fy=50)	▲ 14 WF 264 (Fy=50)	14 WF 78 (Fy=50)				
Top of base Pl at El. 241'							
Base Plate	46 × 4¾ × 4'-0"	46 × 4½ × 3'-10"	20 × 2⅛ × 2'-4"	54 × 5⅞ × 4'-9"	60 × 7 × 5'-5"	60 × 7 × 5'-5"	54 × 5⅞ × 4'-9"

*Provide proper splice plg., bolt holes & finished col. top for future columns. Use upper col. one size smaller except as shown.
▲See detail on 10-JK4-3 and 4.
■Splice 3" above slab. See note on 10-JK2-2
●See detail on 10-JK2-30.

LICENSED PROFESSIONAL ENGINEER LESLIE E. ROBERTSON No. 34360 UNIVERSITY OF THE STATE OF NEW YORK

DRAWN S.C.
REVIEWED E.L.

10-K1-211

A

WORTHINGTON, SKILLING, HELLE & JACKSON — Civil & Structural Engineers

PROJECT: THE WORLD TRADE CENTER | TITLE: COLUMN SCHEDULE | DATE: 5-15-67

REVISIONS
10-20-67
11-8-67
6-7-68
12-3-68
10-14-69

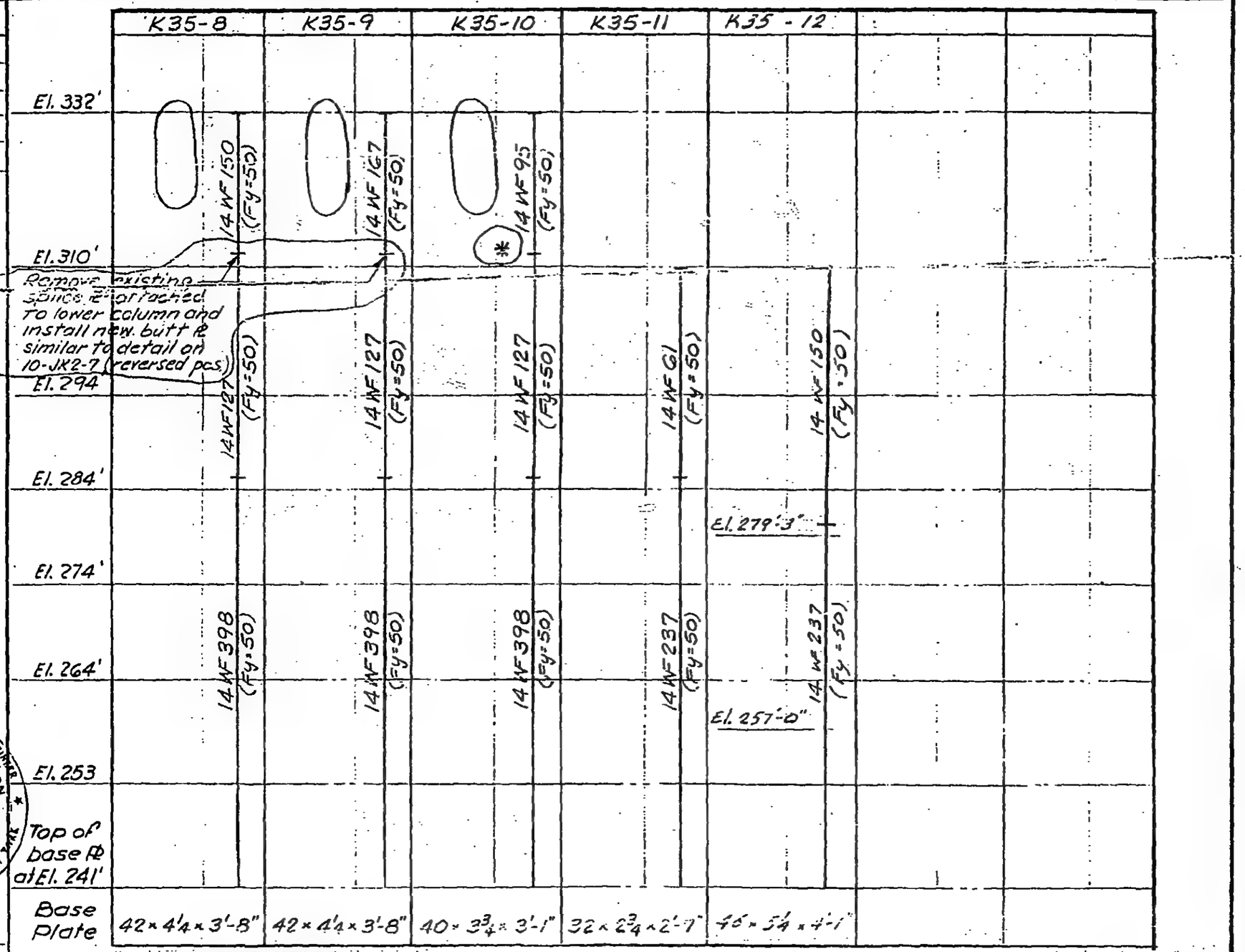

* Provide proper splice pls., bolt holes & finished col. top for future columns. Use upper col. one size smaller except as shown.
▲ See detail on 10-JK4-3 and 4.
■ Splice 3" above slab. See note on 10-JK2-2.
● See detail on 10-JK2-30.

LICENSED PROFESSIONAL ENGINEER — LESLIE E. ROBERTSON — No. 34360 — UNIVERSITY OF THE STATE OF NEW YORK

DRAWN S.C.
REVIEWED E.L.

10-KI-212

WORTHINGTON, SKILLING, HELLE & JACKSON — Civil & Structural Engineers

PROJECT: THE WORLD TRADE CENTER | TITLE: COLUMN SCHEDULE | DATE: 5-15-67

REVISIONS
10-20-67
11-8-67
2-4-69

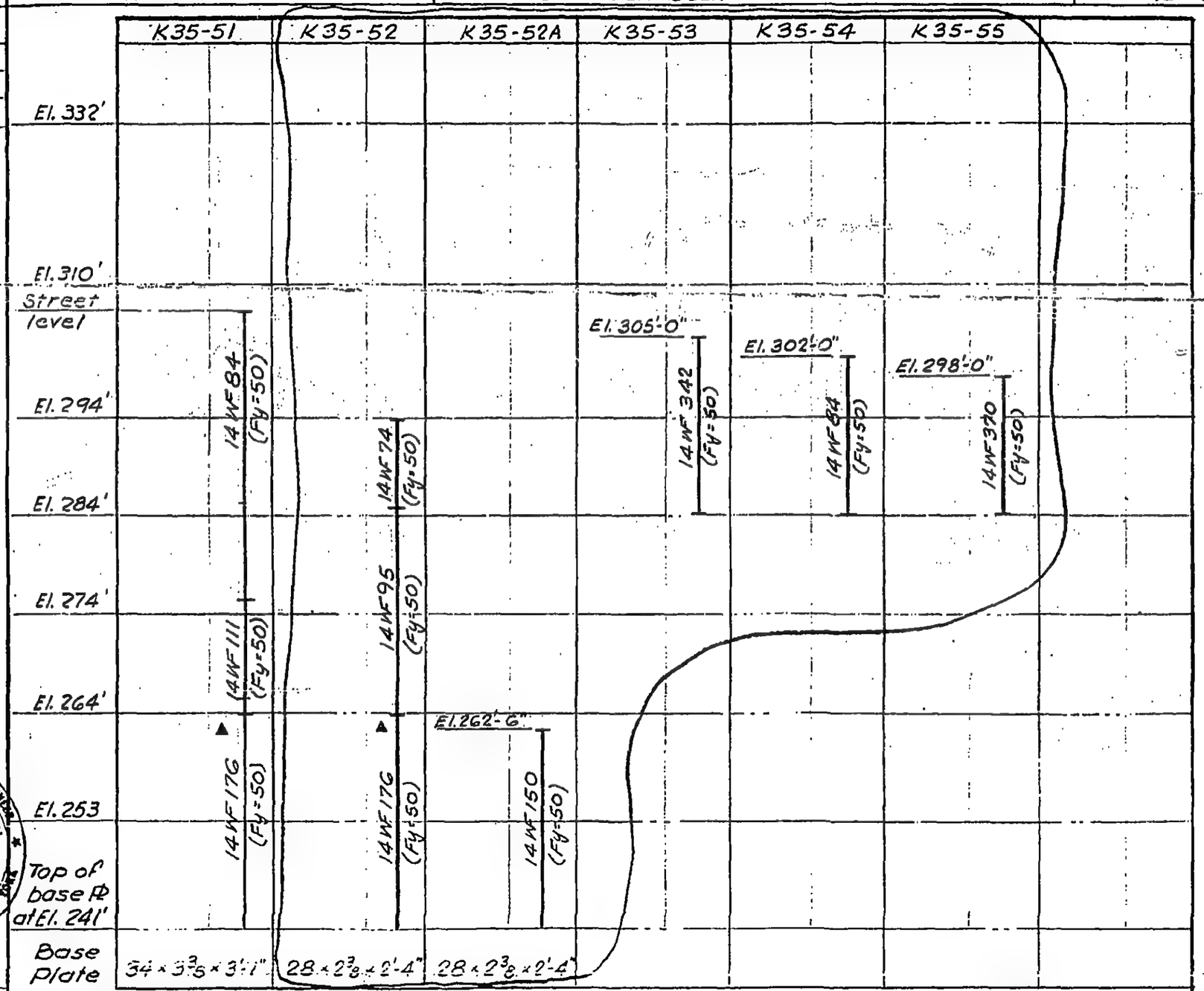

* Provide proper splice pls., bolt holes & finished col. top for future columns. Use upper col. one size smaller except as shown.
▲ See detail on 10-JK4-3 and 4.
■ Splice 3" above slab. See note on 10-JK2-2.
● See detail on 10-JK2-30.

LICENSED PROFESSIONAL ENGINEER — LESLIE E. ROBERTSON — No. 34360 — UNIVERSITY OF THE STATE OF NEW YORK

DRAWN S.C.
REVIEWED E.L.

10-K1-213

WORTHINGTON, SKILLING, HELLE & JACKSON — Civil & Structural Engineers

PROJECT: THE WORLD TRADE CENTER | TITLE: COLUMN SCHEDULE | DATE: 5-15-67

REVISIONS
1-13-69

	K36-1	K36-2	K36-3	K36-4	K36-5	K36-6	K36-7
El. 332'							
El. 310'	14 WF 87 (Fy=50)	14 WF 228 (Fy=50)	14 WF 87 (Fy=50)	14 WF 87 (Fy=50)	14 WF 228 (Fy=50)	14 WF 87 (Fy=50)	14 WF 228 (Fy=50)
El. 290'							
El. 279'-3"							
El. 264'							
El. 253							
Top of Base Pl.							
Base Plate							

* Provide proper splice pls., bolt holes & finished col. top for future columns. Use upper col. one size smaller except as shown.
▲ See detail on 10-JK4-3 and 4.
■ Splice 3" above slab. See note on 10-JK2-2.
● See detail on 10-JK2-30.

LICENSED PROFESSIONAL ENGINEER — LESLIE E. ROBERTSON — No. 34360 — REGISTERED IN THE STATE OF NEW YORK

DRAWN S.C.
REVIEWED R.T. & E.L.

10-K1-214

C

WORTHINGTON, SKILLING, HELLE & JACKSON — Civil & Structural Engineers

PROJECT: THE WORLD TRADE CENTER | TITLE: COLUMN SCHEDULE | DATE: 5-15-67

REVISIONS
2-4-69
2-11-69
4-4-69
5-29-69
1-15-72
11-27-72

	K37-1	K37-2	K37-3	K37-4	K37-5	K37-6	K37-7
El. 332'							12-JK2-181
El. 310'		*See Dwg. Book 13		See D.B. 13	See D.B. 13	*See D.B. 13	* 14 WF 398 (Fy=50)
El. 294'	Street level 14 WF 150 (Fy=50)	14 WF 246 (Fy=50)		El. 309'-0" 14 WF 455 (Fy=50)	El. 306'-0" * 14 WF 665 (Fy=46)	14 WF 730 (Fy=46)	14 WF 665 (Fy=46)
El. 284'							
El. 274'	14 WF 237 (Fy=50)	14 WF 455 (Fy=50)		14 WF 500 (Fy=50)	14 WF 730 (Fy=46)	14 WF 730 (Fy=46)	14 WF 665 (Fy=46)
El. 264'			El. 261'-6"				
El. 253'	▲ 14 WF 500 (Fy=50)	▲ 14 WF 605 (Fy=46)	14 WF 264 (Fy=50)		El. 257' 14 WF 730 (Fy=46)	El. 257 14 WF 730 (Fy=46)	
Top of base Pl at El. 241'							
Base Plate	47 = 5⅛ x 3'-11"	47 = 5⅛ x 3'-11"	28 x 2⅜ x 2'-4"	61 x 7¼ x 5'-1"	74 x 9 x 6'-2"	74 x 9 x 6'-2"	67 x 8 x 5'-7"

* Provide proper splice pls., bolt holes & finished col. top for future columns. Use upper col. one size smaller except as shown.
▲ See detail on 10-JK4-3 and 4.
■ Splice 3" above slab. See note on 10-JK2-2.
⊖ See detail on 10-JK2-30.

LICENSED PROFESSIONAL ENGINEER — LESLIE E. ROBERTSON — No. 34350 — STATE OF NEW YORK

DRAWN: S.C.
REVIEWED: E.L.

10-K1-215

WORTHINGTON, SKILLING, HELLE & JACKSON — Civil & Structural Engineers

PROJECT: THE WORLD TRADE CENTER | TITLE: COLUMN SCHEDULE | DATE: 5-15-67

REVISIONS
9-20-68
12-3-68
2-4-69
2-11-69
10-14-69

	K37-8	K37-9	K37-10
El. 332'			
El. 310'	* 14WF150 (Fy=50)	14WF167 (Fy=50)	■ 14WF95 (Fy=50)
El. 294'	14WF237 (Fy=50)	14WF287 (Fy=50)	14WF184 (Fy=50)
El. 284'			
El. 274'	14WF314 (Fy=50)		
El. 264'		14WF605 (Fy=42)	14WF455 (Fy=50)
El. 253'			
Top of base ▲ at El. 241'			
Base Plate	47×5⅛×3'-11"	47×5⅛×3'-11"	47×5⅛×3'-11"

* Provide proper splice pls., bolt holes & finished col. top for future columns. Use upper col. one size smaller except as shown.
▲ See detail on 10-JK4-3 and 4.
■ Splice 3" above slab. See note on 10-JK2-2.
● See detail on 10-JK2-30.

LICENSED PROFESSIONAL ENGINEER — LESLIE E. ROBERTSON — No. 34360 — UNIVERSITY OF THE STATE OF NEW YORK

DRAWN S.C.
REVIEWED E.L.

10-K1-216

WORTHINGTON, SKILLING, HELLE & JACKSON — Civil & Structural Engineers

PROJECT: THE WORLD TRADE CENTER | TITLE: COLUMN SCHEDULE | DATE: 5-15-67

REVISIONS
9-20-68
2-4-69

	K37-51	K37-52
El. 332'		
El. 310'		
	Street level	
El. 294'	14WF127 (Fy=50)	10|WF112 (Fy=50)
El. 284'		
El. 274'	14WF167 (Fy=50)	
El. 264'		14WF111 (Fy=50)
El. 253	▲ 14WF342 (Fy=50)	
Top of base ℄	El. 241'-0"	El. 235'-4 3/8"
Base Plate	38 x 3 1/2 x 3'-2"	28 x 2 3/8 x 2'-4

LICENSED PROFESSIONAL ENGINEER — LESLIE E. ROBERTSON — No. 34360 — UNIVERSITY OF THE STATE OF NEW YORK

DRAWN S.C.

REVIEWED E.L.

✱ Provide proper splice pls., bolt holes & finished col. top for future columns. Use upper col. one size smaller except as shown.
▲ See detail on 10-JK4-3 and 4.
〓 Splice 3" above slab. See note on 10-JK2-2.
● See detail on 10-JK2-30.

10-K1-217

WORTHINGTON, SKILLING, HELLE & JACKSON — Civil & Structural Engineers

PROJECT: THE WORLD TRADE CENTER | TITLE: COLUMN SCHEDULE | DATE: 5-15-67

REVISIONS
9-20-68

	K38-1	K38-2
El. 332'		
El. 310'		
El. 294'	14 WF 119 (Fy=50)	14 WF 342 (Fy=50)
El. 284'		
El. 279'-3"		
El. 274'		
El. 264'	14 WF 127 (Fy=50)	14 WF 264 (Fy=50)
El. 253		
Top of base Pl at El. 241'		
Base Plate	35 x 3 3/8 x 2'-11"	41 x 4 1/4 x 3'-5"

* Provide proper splice pls., bolt holes & finished col. top for future columns. Use upper col. one size smaller except as shown.
▲ See detail on 10-JK4-3 and 4.
■ Splice 3" above slab. See note on 10-JK2-2.
⊖ See detail on 10-JK2-30.

10-K1-219

LICENSED PROFESSIONAL ENGINEER
LESLIE E. ROBERTSON
No. 34360
UNIVERSITY OF THE STATE OF NEW YORK

WORTHINGTON, SKILLING, HELLE & JACKSON — Civil & Structural Engineers

PROJECT: THE WORLD TRADE CENTER | TITLE: COLUMN SCHEDULE | DATE: 5-15-67

REVISIONS
1-13-69

	K39-1	K39-2	K39-3	K39-4	K39-5	K39-6	K39-7
El. 332'							
El. 310'	14 WF 202 (Fy=50)	14 WF 264 (Fy=50)	14 WF 202 (Fy=50)	14 WF 202 (Fy=50)	14 WF 264 (Fy=50)	14 WF 202 (Fy=50)	14 WF 264 (Fy=50)
El. 290'							
El. 279'3"							
El. 264'							
El. 253							
Top of Base Pl.							
Base Plate							

* Provide proper splice pls., bolt holes & finished col. top for future columns. Use upper col. one size smaller except as shown.
▲ See detail on 10-JK4-3 and 4.
■ Splice 3" above slab. See note on 10-JK2-2.
● See detail on 10-JK2-30.

LICENSED PROFESSIONAL ENGINEER — LESLIE E. ROBERTSON — No. 34360 — REGISTERED IN THE STATE OF NEW YORK

DRAWN S.C.
REVIEWED R.T. & E.L.

10-K1-219

WORTHINGTON, SKILLING, HELLE & JACKSON — Civil & Structural Engineers

PROJECT: THE WORLD TRADE CENTER | TITLE: COLUMN SCHEDULE | DATE: 5-15-67

REVISIONS
6-7-68
9-20-68
11-5-68

	K40-1	K40-2
El. 332'		
El. 310'		
El. 290'	14 WF 158 (Fy = 50)	14 WF 103 (Fy = 50)
El. 279'-3"		
El. 264'	14 WF 158 (Fy = 50)	14 WF 193 (Fy = 50)
El. 253		
Top of Base Pl. at El. 241'		
Base Plate	42 x 4 3/8 x 3'-6"	45 x 3 7/8 x 3'-11"

* Provide proper splice pls., bolt holes & finished col. top for future columns. Use upper col. one size smaller except as shown.
▲ See detail on 10-JK4-3 and 4.
〓 Splice 3" above slab. See note on 10-JK2-2.
● See detail on 10-JK2-30.

10-K1-220

LICENSED PROFESSIONAL ENGINEER — LESLIE E. ROBERTSON — No. 34360 — UNIVERSITY OF THE STATE OF NEW YORK

C

WORTHINGTON, SKILLING, HELLE & JACKSON — Civil & Structural Engineers

PROJECT: THE WORLD TRADE CENTER | TITLE: COLUMN SCHEDULE | DATE: 5-15-67

REVISIONS
2-4-69
2-11-69
1-15-72
11-27-72

	K41-1	K41-2	K41-3	K41-4	K41-5	K41-6	K41-7
El. 332'							12-JK2-181
El. 310'			* See Dwg Book 13	* See D.B. 13	* See D.B. 13	* See D.B. 13	* 14 WF 398 (Fy=50)
Street level	14 WF 95 (Fy=50)	14 WF 158 (Fy=50)	14 WF 246 (Fy=50)	14 WF 500 (Fy=50)	14 WF 665 (Fy=46)	14 WF 320 + ℙ 22 × 2¾ (B.S.) (Fy=42)	14 WF 605 (Fy=46)
El. 284'							
El. 274'	14 WF 142 (Fy=50)	14 WF 237 (Fy=50)	14 WF 455 (Fy=50)	14 WF 550 (Fy=50)	14 WF 320 + ℙ 24 × 3 (B.S.) (Fy=42)	14 WF 320 + ℙ 22 × 2¾ (B.S.) (Fy=42)	14 WF 320 + ℙ 22 × 2¾ (B.S.) (Fy=42)
El. 264'							
El. 253'	▲ 14 WF 287 (Fy=50)	▲ 14 WF 500 (Fy=50)	14 WF 605 (Fy=46)				
Top of base ℙ at El. 241'							
Base Plate	33 × 3⅛ × 2'-9"	47 × 5⅛ × 3'-11"	48 × 5¼ × 4'-0"	61 × 7¼ × 5'-1"	74 × 9 × 6'-2"	74 × 9 × 6'-2"	67 × 8 × 5'-7"

* Provide proper splice pls., bolt holes & finished col. top for future columns. Use upper col. one size smaller except as shown.
▲ See detail on 10-JK4-3 and 4.
■ Splice 3" above slab. See note on 10-JK2-2.
● See detail on 10-JK2-30.

LICENSED PROFESSIONAL ENGINEER — LESLIE E. ROBERTSON — No. 34360 — UNIVERSITY OF THE STATE OF NEW YORK

DRAWN S.C.
REVIEWED E.L.

10-K1-221

A

WORTHINGTON, SKILLING, HELLE & JACKSON — Civil & Structural Engineers

PROJECT: THE WORLD TRADE CENTER | TITLE: COLUMN SCHEDULE | DATE: 5-15-67

REVISIONS
9-20-68
12-3-68
2-4-69
2-11-69
10-14-69
12-23-71
11-27-72

	K41-8	K41-9	K41-10	K41-11
El. 332'				
El. 310'	* 14WF150 (Fy=50)	* 14WF167 (Fy=50)	■ See Dwg Book 3	
El. 294'	14WF246 (Fy=50)	14WF287 (Fy=50)	Add'l cover PLs See 19-K-1053 14WF136 (Fy=50)	14WF78 (Fy=50)
El. 284'				
El. 274'	14WF314 (Fy=50)			
El. 264'		14WF605 (Fy=42)	14WF237 (Fy=50)	14WF87 (Fy=50)
El. 253'				
Top of base Pl	El. 241'-0"	El. 241'-0"	El. 241'-0"	El. 235'-5⅛"
Base Plate	47 x 5⅛ x 3'-11"	47 x 5⅛ x 3'-11"	47 x 5⅛ x 3'-11"	33 x 3⅛ x 2'-7"

DRAWN S.C.
REVIEWED E.L.

* Provide proper splice pls., bolt holes & finished col. top for future columns. Use upper col. one size smaller except as shown.
▲ See detail on 10-JK4-3 and 4.
■ Splice 3" above slab. See note on 10-JK2-2.
● See detail on 10-JK2-30.

10-KL-222

A

WORTHINGTON, SKILLING, HELLE & JACKSON — Civil & Structural Engineers

PROJECT: THE WORLD TRADE CENTER | TITLE: COLUMN SCHEDULE | DATE: 5-15-67

REVISIONS
2-4-69

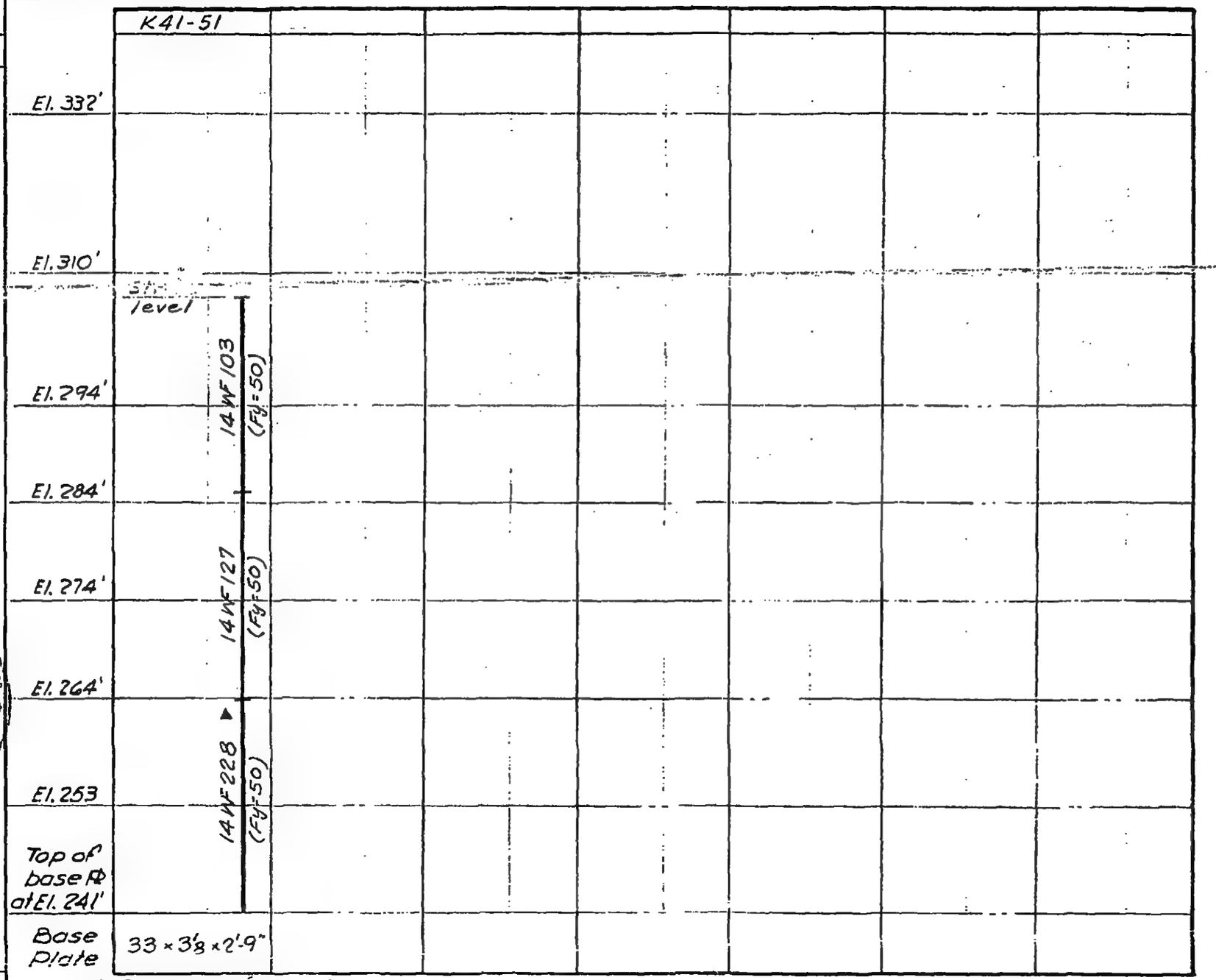

LICENSED PROFESSIONAL ENGINEER
LESLIE E. ROBERTSON
No. 34360
OF THE STATE OF NEW YORK
UNIVERSITY

DRAWN S.C.
REVIEWED E.L.

* Provide proper splice pls., bolt holes & finished col. top for future columns. Use upper col. one size smaller except as shown.
▲ See detail on 10-JK4-3 and 4.
■ Splice 3" above slab. See note on 10-JK2-2.
● See detail on 10-JK2-30.

10-K1-223

A

WORTHINGTON, SKILLING, HELLE & JACKSON — Civil & Structural Engineers

PROJECT: THE WORLD TRADE CENTER | TITLE: COLUMN SCHEDULE | DATE: 5-15-67

REVISIONS
12-17-68
4-17-69

	M42-1	K42-2	M42-3
El. 332'			
El. 310'	14 WF 202 (Fy=50) (By others)		14 WF 287 (Fy=50) (By others)
El. 294'		14 WF 426 (Fy=50)	See 10-JK3-2E; 14 WF 287 (Fy=50)
El. 284'			
El. 274'		Temp. Bracing; 14 WF 426 (Fy=50)	
El. 264'			
El. 253		14 WF 500 (Fy=50)	
Top of base Pl		El. 243'-4"	
Base Plate		53 × 6 × 4'5"	

LICENSED PROFESSIONAL ENGINEER — LESLIE E. ROBERTSON — No. 34360 — UNIVERSITY OF THE STATE OF NEW YORK

DRAWN S.C.
REVIEWED E.L.

* Provide proper splice pls., bolt holes & finished col. top for future columns. Use upper col. one size smaller except as shown.
▲ See detail on 10-JK4-3 and 4.
■ Splice 3" above slab. See note on 10-JK2-2.
● See detail on 10-JK2-30.

10-K1-225

A

WORTHINGTON, SKILLING, HELLE & JACKSON — Civil & Structural Engineers

PROJECT: THE WORLD TRADE CENTER | TITLE: COLUMN SCHEDULE | DATE: 5-15-67

REVISIONS
2-4-69
2-11-69
3-1-69
3-12-69
3-21-69
10-23-69
11-27-72

	K43-1	K43-2	K43-3	K43-4	K43-5	K43-6	K43-7
El. 332'			*See Dwg. Book 13	*See D.B. 13	*See D.B. 13	*See D.B. 13	-3" See Dwg. Book 13
El. 310'							
El. 294'		Street level 14 WF 176 (Fy=50)	14 WF 605 (Fy=46)	14 WF 320 + PL 23×3 (B.S.) (Fy=42)	14 WF 320 + PL 24×3 (B.S.) (Fy=42)	14 WF 550 (Fy=50)	14 WF 264 (Fy=50)
El. 284'	14 WF 87 (Fy=50)						
El. 274'	14 WF 111 (Fy=50)	14 WF 211 (Fy=50)	14 WF 605 (Fy=46)	14 WF 320 + PL 23×3 (B.S.) (Fy=42)	14 WF 320 + PL 24×3 (B.S.) (Fy=42)	14 WF 550 (Fy=50)	14 WF 287 (Fy=50)
El. 264'		4-Girds.					
El. 253	▲ 14 WF 193 (Fy=50)	14 WF 455 (Fy=50)	▲ 14 WF 320 + PL 23×3 (B.S.) (Fy=42)	▲ 14 WF 320 + PL 24×3½ (B.S.) (Fy=42)	▲ 14 WF 320 + PL 24×3½ (B.S.) (Fy=42)	▲ 14 WF 320 + PL 23×3 (B.S.) (Fy=42)	▲ 14 WF 500 (Fy=50)
Top of base Pl at El. 241'							
Base Plate	33×3⅜×2'-9"	47×5⅛×2'-11"	74×9×6'-2"	86×10¾×7'-2"	86×10¾×7'-2"	72×8¾×6'-0"	55×6¼×4'-7"

* Provide proper splice pls., bolt holes & finished col. top for future columns. Use upper col. one size smaller except as shown.
▲ See detail on 10-JK4-3 and 4.
■ Splice 3" above slab. See note on 10-JK2-2.
● See detail on 10-JK2-30.

DRAWN S.C.
REVIEWED E.L.

LICENSED PROFESSIONAL ENGINEER — LESLIE E. ROBERTSON — No. 34350 — UNIVERSITY OF THE STATE OF NEW YORK

10-K1-226

WORTHINGTON, SKILLING, HELLE & JACKSON Civil & Structural Engineers

PROJECT THE WORLD TRADE CENTER | TITLE COLUMN SCHEDULE | DATE 5-15-67

REVISIONS
12-3-68
10-23-69
11-27-72

	K43-3	K43-9
El. 332'	3' See Dwg Book 13	
El. 310'		
El. 294'	14WF264 (Fy-50)	14WF370 (Fy=50)
El. 284'		
El. 274'	14WF287 (Fy=50)	14WF370 (Fy=50)
El. 264'	▲	▲
El. 253	14WF287 (Fy=50)	14WF370 (Fy=50)
Top of base Pl at El. 241'		
Base Plate	55x64x4'-7"	46x51'-10"

✱ Provide proper splice pls., bolt holes & finished col. top for future columns. Use upper col. one size smaller except as shown.
▲ See detail on 10-JK4-3 and 4.
▬ Splice 3" above slab. See note on 10-JK2-2.
● See detail on 10-JK2-30.

LICENSED PROFESSIONAL ENGINEER ★ WESLEY E. ROBERTSON ★ No. 34360 ★ UNIVERSITY OF THE STATE OF NEW YORK

DRAWN S.C.
REVIEWED E.L.

10-K1-227

WORTHINGTON, SKILLING, HELLE & JACKSON Civil & Structural Engineers

PROJECT THE WORLD TRADE CENTER | TITLE COLUMN SCHEDULE | DATE 5-15-67

REVISIONS
3-1-69
3-12-69
3-21-69

	K43-51	K43-52	K43-53
El. 332'			
El. 310'			
Street level			
El. 294'	14 WF 87 (Fy=50)	14 WF 87 (Fy=50)	12 Girder Top of col. El. 294'-0"
El. 284'			
El. 274'	14 WF 111 (Fy=50)	14 WF 136 (Fy=50)	14 WF 136 (Fy=50)
El. 264'			
El. 253	▲ 14 WF 202 (Fy=50)	▲ 14 WF 219 (Fy=50)	12 Girder
Top of base Pl at El. 241'			
Base Plate	33 × 3⅛ × 2'-9"	35 × 3⅜ × 2'-11"	

* Provide proper splice pls., bolt holes & finished col. top for future columns. Use upper col. one size smaller except as shown.
▲ See detail on 10-JK4-3 and 4.
■ Splice 3" above slab. See note on 10-JK2-2.
● See detail on 10-JK2-30.

LICENSED PROFESSIONAL ENGINEER LESLIE E. ROBERTSON No. 34360 UNIVERSITY OF THE STATE OF NEW YORK

DRAWN S.C.
REVIEWED E.L.

10-K1-228

A

WORTHINGTON, SKILLING, HELLE & JACKSON — Civil & Structural Engineers

PROJECT: THE WORLD TRADE CENTER | TITLE: COLUMN SCHEDULE | DATE: 5-15-67

REVISIONS
12-17-68
8-10-70

	K44-1	K44-2	K44-3	K44-4			
El. 332'							
El. 310'	See det. 10-JK2-43 ■ 14WF68 (Fy=50)		✱				
El. 294'	14 WF 287 (Fy=50)		14WF287 (Fy=50)				
El. 284'							
El. 274'	Temp. bracing		Temp. bracing	14 WF 370 (Fy=50)			
El. 264'							
El. 253	14 WF 370 (Fy=50)	14 WF 158 (Fy=50)		14 WF 455 (Fy=50)			
Top of base Pl	El. 244'-0"	El. 243'-4"		El. 243'-4"			
Base plate	45 × 4 7/8 × 3'-9"	28 × 2 3/8 × 2'-4"		53 × 6 × 4'-5"			

✱ Provide proper splice pls., bolt holes & finished col. top for future columns. Use upper col. one size smaller except as shown.
▲ See detail on 10-JK4-3 and 4.
■ Splice 3" above slab. See note on 10-JK2-2.
● See detail on 10-JK2-30.

10-K1-229

LICENSED PROFESSIONAL ENGINEER — LESLIE E. ROBERTSON — No. 34360 — UNIVERSITY OF THE STATE OF NEW YORK

A

WORTHINGTON, SKILLING, HELLE & JACKSON Civil & Structural Engineers

PROJECT: THE WORLD TRADE CENTER | TITLE: COLUMN SCHEDULE | DATE: 5-15-67

REVISIONS

- 12-3-68
- 3-1-69
- 3-12-69
- 3-21-69
- 10-23-69
- 11-27-72

	K45-1	K45-2	K45-3	K45-4	K45-5	K45-6	K45-7
El. 332'							
El. 310'		* See Dwg Book 13	* See D.B. 13	* See D.B. 13	See D.B. 13		
Street level	Top of girder @ El. 297'-0" PL Girder 14WF68 (Fy=50)	14WF320 + PL 18×1¼ (B.S.) (Fy=42)	14WF320 + PL 22×2⅝ (B.S.) (Fy=42)	14WF320 + PL 22×2⅝ (B.S.) (Fy=42)	14WF455 (Fy=50)	14WF320 (Fy=50)	14WF287 (Fy=50)
El. 294'	Bott of girder @ El. 294'-0" Hanger 14WF43 (Fy=36)						
El. 284'					El. 282'-0"	El. 284'-9"	
El. 274'	Bott. of hanger @ El. 282'-5"	14WF320 + PL 20×1⅜ (B.S.) (Fy=42)	14WF320 + PL 22×2¾ (B.S.) (Fy=42)	El. 279'-0" 14WF320 + PL 22×2¾ (B.S.) (Fy=42)	14WF500 (Fy=50)	14WF342 (Fy=50)	14WF342 (Fy=50)
El. 264'	PL Girder 14WF43 (Fy=36)						
El. 253	14WF287 (Fy=50)	14WF320 + PL 22×1¾ (B.S.) (Fy=42)	14WF320 + PL 24×3 (B.S.) (Fy=42)	14WF320 + PL 24×3 (B.S.) (Fy=42)	14WF550 (Fy=50)	14WF370 (Fy=50)	14WF342 (Fy=50)
Top of base PL at El. 241'							
Base Plate	42×4⅜×3'-6"	70×8½×5'-10"	84×10½×7'-0"	84×10½×7'-0"	69×8¼×5'-9"	55×6¼×4'-7"	57×6¼×4'-9"

* Provide proper splice pls., bolt holes & finished col. top for future columns. Use upper col. one size smaller except as shown.
▲ See detail on 10-JK4-3 and 4.
■ Splice 3" above slab. See note on 10-JK2-2.
● See detail on 10-JK2-30.

LICENSED PROFESSIONAL ENGINEER LESLIE E. ROBERTSON No. 34360 UNIVERSITY OF THE STATE OF NEW YORK

DRAWN S.C.

REVIEWED E.L.

10-K1-230

A

WORTHINGTON, SKILLING, HELLE & JACKSON — Civil & Structural Engineers

PROJECT: THE WORLD TRADE CENTER | TITLE: COLUMN SCHEDULE | DATE: 5-15-67

REVISIONS
12-3-68
10-23-69
11-27-72

	K45-B
El. 332'	See Dwg. Book 13
El. 310'	3"
El. 294'	14 WF 237 (Fy=50)
El. 284'	
El. 274'	14 WF 287 (Fy=50)
El. 264' ▲	
El. 253	14 WF 287 (Fy=50)
Top of base Pl	El. 241'-0"
Base Plate	46 x 5 x 3'-10"

* Provide proper splice pls., bolt holes & finished col. top for future columns. Use upper col. one size smaller except as shown.
▲ See detail on 10-JK4-3 and 4.
■ Splice 3" above slab. See note on 10-JK2-2.
● See detail on 10-JK2-30.

LICENSED PROFESSIONAL ENGINEER — LESLIE E. ROBERTSON — No. 34360 — UNIVERSITY OF THE STATE OF NEW YORK

DRAWN S.C.
REVIEWED E.L.

10-K1-231

A

WORTHINGTON, SKILLING, HELLE & JACKSON Civil & Structural Engineers

PROJECT THE WORLD TRADE CENTER | TITLE COLUMN SCHEDULE | DATE 5-15-67

REVISIONS
3-1-69
3-12-69
3-21-69

	K45-51						
El. 332'							
El. 310'							
Street level							
El. 294'	14 WF 136 (Fy-50)						
El. 284'							
El. 274'							
El. 264'	14 WF 211 (Fy-36)						
El. 253							
Top of base Pl at El. 241'							
Base Plate	$37-3\frac{5}{8}=3'-1"$						

LICENSED PROFESSIONAL ENGINEER
LESLIE E. ROBERTSON
No. 34360
UNIVERSITY OF THE STATE OF NEW YORK

DRAWN S.C.
REVIEWED E.L.

* Provide proper splice pls., bolt holes & finished col. top for future columns. Use upper col. one size smaller except as shown.
▲ See detail on 10-JK4-3 and 4.
■ Splice 3" above slab. See note on 10-JK2-2.
● See detail on 10-JK2-30.

10-K1-232

WORTHINGTON, SKILLING, HELLE & JACKSON — Civil & Structural Engineers

PROJECT: THE WORLD TRADE CENTER | TITLE: COLUMN SCHEDULE | DATE: 5-15-67

REVISIONS
12-17-68
4-30-69

	K46-51	K46-52	K46-53
El. 332'	See 12-JK2-107	See 12-JK2-108	
El. 310'			
El. 294'	14 WF 370 (Fy=50)	Temp. bracing	14 WF 605 (Fy=50)
El. 284'			
El. 274'	Temp. bracing, ℄-Girder	14 WF 605 (Fy=50)	℄-Girder
El. 264'		℄-Girder	14 WF 665 (Fy=50)
El. 253	▲ 14 WF 455 (Fy=50)		▲ 14 WF 665 (Fy=50)
Top of base ℄	El. 242'-0"		El. 243'-4"
Base Plate	C 3 × 7⅛ × 5'-3"		70 × 8½ × 5'-10"

LICENSED PROFESSIONAL ENGINEER — LESLIE E. ROBERTSON — No. 34360 — UNIVERSITY OF THE STATE OF NEW YORK

DRAWN S.C.
REVIEWED E.L.

* Provide proper splice pls., bolt holes & finished col. top for future columns. Use upper col. one size smaller except as shown.
▲ See detail on 10-JK4-3 and 4.
■ Splice 3" above slab. See note on 10-JK2-2.
● See detail on 10-JK2-30.

10-K1-233

WORTHINGTON, SKILLING, HELLE & JACKSON — Civil & Structural Engineers

PROJECT: THE WORLD TRADE CENTER | TITLE: COLUMN SCHEDULE | DATE: 5-15-67

REVISIONS
3-1-69
3-12-69
3-21-69
10-23-69
11-27-72

	K47-1	K47-2	K47-3	K47-4	K47-5	K47-6	K47-7
El. 332'		* See Dwg Book 13	* See D.B. 13	* See D.B. 13	* See D.B. 13	* See D.B. 13	* See D.B. 13
El. 310'							
Street level	14 WF 136 (Fy=50)	14 WF 455 (Fy=50)	14 WF 320 + PL 23×3 (B.S.) (Fy=42)	14 WF 320 + PL 23×2⅞ (B.S.) (Fy=42)	14 WF 398 (Fy=50)	14 WF 228 (Fy=50)	14 WF 211 (Fy=50)
El. 294'							
El. 284'	14 WF 193 (Fy=50)	14 WF 500 (Fy=50)	14 WF 320 + PL 24×3 (B.S.) (Fy=42)	14 WF 320 + PL 23×3 (B.S.) (Fy=42)	14 WF 426 (Fy=50)	14 WF 264 (Fy=50)	14 WF 264 (Fy=50)
El. 274'							
El. 264'	▲ 14 WF 211 (Fy=50)	▲ 14 WF 550 (Fy=50)	▲ 14 WF 320 + PL 24×3⅝ (B.S.) (Fy=42)	▲ 14 WF 320 + PL 24×3½ (B.S.) (Fy=42)	▲ 14 WF 500 (Fy=50)	▲ 14 WF 370 (Fy=50)	▲ 14 WF 370 (Fy=50)
El. 253							
Top of base Pl at El. 241'							
Base Plate	47×5⅛×3'-11"	73×9×6'-1"	88×11×7'-4"	88×11×7'-4"	68×8½×5'-8	51×5⅝×4'-3"	57×6¼×4'-9"

* Provide proper splice pls., bolt holes & finished col. top for future columns. Use upper col. one size smaller except as shown.
▲ See detail on 10-JK4-3 and 4.
■ Splice 3" above slab. See note on 10-JK2-2.
● See detail on 10-JK2-30.

LICENSED PROFESSIONAL ENGINEER — LESLIE E. ROBERTSON — No. 34360 — UNIVERSITY OF THE STATE OF NEW YORK

DRAWN S.C.
REVIEWED E.L.

10-K1-234

WORTHINGTON, SKILLING, HELLE & JACKSON — Civil & Structural Engineers

PROJECT: THE WORLD TRADE CENTER | TITLE: COLUMN SCHEDULE | DATE: 5-15-67

REVISIONS
3-1-69
3-12-69
3-21-69
10-23-69
11-27-72

	K47-8
El. 332'	■ See Dwg. Book 13.
El. 310'	
El. 294'	14 WF 176 (Fy=50)
El. 284'	
El. 274'	14 WF 202 (Fy=50)
El. 264'	
El. 253	▲ 14 WF 314 (Fy=50)
Top of base Pl at El. 241'	
Base Plate	46×5×3'-10"

* Provide proper splice pls., bolt holes & finished col. top for future columns. Use upper col. one size smaller except as shown.
▲ See detail on 10-JK4-3 and 4.
■ Splice 3" above slab. See note on 10-JK2-2.
● See detail on 10-JK2-30.

LICENSED PROFESSIONAL ENGINEER — LESLIE E. ROBERTSON — No. 34360 — UNIVERSITY OF THE STATE OF NEW YORK

DRAWN S.C.
REVIEWED E.L.

10-K1-235

A

WORTHINGTON, SKILLING, HELLE & JACKSON — Civil & Structural Engineers

PROJECT: THE WORLD TRADE CENTER | TITLE: COLUMN SCHEDULE | DATE: 5-15-67

REVISIONS
1-17-69
3-1-69
3-12-69
3-21-69
10-23-69
11-27-72

	K47-51	K47-52	K47-53	K47-54
El. 332'			See Dwg. Book 13	
El. 310'		14 WF 127 (Fy=50) ■		
Street level				
El. 294'	14 WF 119 (Fy=50)	14 WF 176 (Fy=50)	14 WF 320 + PL 22×2 (B.S.) (Fy=42)	14 WF 320 + PL 22×2 (B.S.) (Fy=42)
El. 284'				
El. 274'		14 WF 246 (Fy=50)	14 WF 320 + PL 22×2¼ (B.S.) (Fy=42)	14 WF 320 + PL 22×2¼ (B.S.) (Fy=42)
El. 264'	14 WF 202 (Fy=50)			
El. 253		14 WF 314 (Fy=50)	4-WF 320 + PL 22×2¾ (B.S.) ▲ (Fy=42)	4-WF 320 + PL 22×2¾ (B.S.) ▲ (Fy=42)
Top of base PL	El. 248'-0"	El. 235'-7⅜"	El. 241'-0"	El. 241'-9"
Base Plate	34×3¼×2'-10"	49×5⅜×4'-1"	79×10×7'-2"	79×10×7'-2"

✱ Provide proper splice pls., bolt holes & finished col. top for future columns. Use upper col. one size smaller except as shown.
▲ See detail on 10-JK4-3 and 4.
■ Splice 3" above slab. See note on 10-JK2-2.
● See detail on 10-JK2-30.

LICENSED PROFESSIONAL ENGINEER — LESLIE E. ROBERTSON — No. 34360 — REGISTERED IN THE STATE OF NEW YORK

DRAWN S.C.
REVIEWED E.L.

10-K1-236

A

WORTHINGTON, SKILLING, HELLE & JACKSON — Civil & Structural Engineers

PROJECT: THE WORLD TRADE CENTER | TITLE: COLUMN SCHEDULE | DATE: 5-15-67

REVISIONS
12-17-68
4-17-69

	K48-1	K48-2	K48-3	K48-4	M48-5
El. 332'					
El. 310'			10-JK2-17		10-JK2-17
El. 294'	14WF342 (Fy=50)		14WF500 (Fy=50)		See detail on 10-JK3-2F. 14WF287 (Fy=50)
El. 284'					
El. 274'	Temp. bracing 14WF455 (Fy=50)		Temp. bracing 14WF605 (Fy=50)		
El. 264' ▲					
El. 253	14WF455 (Fy=50)	14WF228 (Fy=50)		14WF665 (Fy=50)	
Top of base Pl.	El. 242'-0"	El. 242'-0"		El. 241'-0"	
Base Plate	55 x 64 x 4'-7"	33 x 36 x 2'-9"		64 x 84 x 5'-9"	

LICENSED PROFESSIONAL ENGINEER — LESLIE E. ROBERTSON — No. 34360 — UNIVERSITY OF THE STATE OF NEW YORK

DRAWN S.C.
REVIEWED E.L.

* Provide proper splice pls., bolt holes & finished col. top for future columns. Use upper col. one size smaller except as shown.
▲ See detail on 10-JK4-3 and 4.
■ Splice 3" above slab. See note on 10-JK2-2.
● See detail on 10-JK2-30.

10-K1-237

WORTHINGTON, SKILLING, HELLE & JACKSON — Civil & Structural Engineers

PROJECT: THE WORLD TRADE CENTER | TITLE: COLUMN SCHEDULE | DATE: 5-15-67

REVISIONS
3-1-69
3-12-69
3-21-69
10-23-69
11-27-72

	K49-1			K49-4	K49-5	K49-6	
El. 332'				*See Dwg. Book 13		*See D.B. 13	
El. 310'							
Column level							
El. 294'	14 WF 119 (Fy=50)			14 WF 320 + PL 23"×2⅞ (B.S.) (Fy=42)	*See D.B. 13	14 WF 264 (Fy=50)	
El. 284'							
El. 274'				14 WF 320 + PL 23"×3 (B.S.) (Fy=42)	14 WF 455 (Fy=50)	14 WF 314 (Fy=50)	
El. 264'	14 WF 193 (Fy=50)						
El. 253				▲ 14 WF 320 + PL 24"×3¼ (B.S.) (Fy=42)	▲ 14 WF 550 (Fy=50)	14 WF 398 (Fy=50)	
Top of base Pl at El. 241'							
Base Plate	41 × 4'-4" × 3'-5"			88 × 11 × 7'-4"	69 × 8'-4" × 5'-9"	57 × 6'-4" × 4'-9"	

✱ Provide proper splice pls., bolt holes & finished col. top for future columns. Use upper col. one size smaller except as shown.
▲ See detail on 10-JK4-3 and 4.
■ Splice 3" above slab. See note on 10-JK2-2.
● See detail on 10-JK2-30.

LICENSED PROFESSIONAL ENGINEER — LESLIE E. ROBERTSON — No. 34360 — UNIVERSITY OF THE STATE OF NEW YORK

DRAWN S.C.
REVIEWED E.L.

10-K1-238

A

WORTHINGTON, SKILLING, HELLE & JACKSON — Civil & Structural Engineers

PROJECT: THE WORLD TRADE CENTER | TITLE: COLUMN SCHEDULE | DATE: 5-15-67

REVISIONS
1-17-69
3-1-69
3-12-69
3-21-69
6-13-69
11-27-72

	K49-51	K49-52	K49-53	K49-54	K49-55	K49-56
El. 332'				* See Dwg. Book 13	See DB. 13	
El. 310'				El. 310'-4		
Street level / El. 294'	14WF84 (Fy=50)		14WF53 (Fy=50)	14WF320 +12 22x2 (B.S.) (Fy=42)	14WF320 +12 22x2 (B.S.) Fy=42	
El. 284'						
El. 274'				14WF320 +12 22x2¼ (B.S.) (Fy=42)	14WF320 +12 22x2¼ (B.S.) (Fy=42)	(See 12-JK1-47) 14WF500 (Fy=36)
El. 264'	14WF184 (Fy=36)	(See 12-JK1-47) 14WF111 (Fy=36)	8 girder			
El. 253			14WF142 (Fy=36)	14WF320 +12 22x2¾ (B.S.) (Fy=42) ▲	14WF320 +12 22x2¾ (B.S.) (Fy=42) ▲	
Top of base Pl.	El. 248'-0"	El. 248'-0"	El. 241'-0"	El. 241'-0"	El. 241'-0"	
Base Plate	31x23½x3'-7"	28x23⅝x2'-4"	30x25⅝x2'-4"	79x10x7'-2"	79x10x7'-2"	

LICENSED PROFESSIONAL ENGINEER — LESLIE E. ROBERTSON — No. 34360 — STATE OF NEW YORK

DRAWN S.C.
REVIEWED E.L.

* Provide proper splice pls., bolt holes & finished col. top for future columns. Use upper col. one size smaller except as shown.
▲ See detail on 10-JK4-3 and 4.
■ Splice 3" above slab. See note on 10-JK2-2.
● See detail on 10-JK2-30.

10-K1-239

A

WORTHINGTON, SKILLING, HELLE & JACKSON — Civil & Structural Engineers

PROJECT: THE WORLD TRADE CENTER | TITLE: COLUMN SCHEDULE | DATE: 5-15-67

REVISIONS
12-17-68

	K50-1	K50-2	K50-3				
El. 332'							
El. 310'	■	10-JK2-17	10-JK2-17				
El. 294'	14 WF 342 (Fy=50)	14 WF 500 (Fy=50)	14 WF 500 (Fy=50)				
El. 284'							
El. 274'	Temp. bracing ▲ 14 WF 455 (Fy=50)	Temp. bracing ▲ 14 WF 605 (Fy=50)	Temp. bracing ▲ 14 WF 550 (Fy=50)				
El. 264'							
El. 253	14 WF 550 (Fy=50)	14 WF 730 (Fy=50)	14 WF 550 (Fy=50)				
Top of base Pl	El. 242'-0"	El. 243'-4"	El. 249'-0"				
Base Plate	55 × 6¼ × 4'-7"	74 × 9 × 6'-2"	72 × 8¾ × 6'-0"				

* Provide proper splice pls., bolt holes & finished col. top for future columns. Use upper col. one size smaller except as shown.
▲ See detail on 10-JK4-3 and 4.
■ Splice 3" above slab. See note on 10-JK2-2.
● See detail on 10-JK2-30.

10-K1-240

LICENSED PROFESSIONAL ENGINEER — LESLIE E. ROBERTSON — No. 34360 — UNIVERSITY OF THE STATE OF NEW YORK

WORTHINGTON, SKILLING, HELLE & JACKSON Civil & Structural Engineers

PROJECT THE WORLD TRADE CENTER | TITLE COLUMN SCHEDULE | DATE 5-15-67

REVISIONS
3-1-69
3-12-69
3-21-69
10-23-69
11-27-72

	K51-1	K51-2	K51-3	K51-4	K51-5	K51-6	K51-7
El. 332'							℞ Girder
El. 310'		* See Dwg. Book 73	* See D.B. 13	* See D.B. 13	* See D.B. 13	* 14 WF 142 (Fy=50)	14 WF 87 (Fy=50)
Street level							
El. 294'	14 WF 87 (Fy=50)	14 WF 455 (Fy=50)	14 WF 320 + ℞ 23 x 2¾ (B.S.) (Fy=42)	14 WF 320 + ℞ 23 x 2⅞ (B.S.) (Fy=42)	14 WF 398 (Fy=50)	14 WF 219 (Fy=50)	14 WF 246 (Fy=50)
El. 284'							
El. 274'	14 WF 119 (Fy=50)	14 WF 500 (Fy=50)		14 WF 320 + ℞ 24 x 3 (B.S.) (Fy=42)	14 WF 455 (Fy=50)	14 WF 264 (Fy=50)	14 WF 287 (Fy=50)
El. 264'	El. 270'-4" ℞ girder						
El. 253		▲ 14 WF 550 (Fy=50)	14 WF 320 + ℞ 23 x 3 (B.S.) (Fy=42)	▲ 14 WF 320 + ℞ 24 x 3⅜ (B.S.) (Fy=42)	▲ 14 WF 500 (Fy=50)	▲ 14 WF 320 (Fy=50)	14 WF 342 (Fy=50)
Top of base ℞		El. 241'-0"	El. 241'-0"	El. 241'-0"	El. 241'-0"	El. 241'-0"	El. 235'-8½"
Base Plate		73 x 9 x 6'-1"	8.5 x 10¾ x 7'-1"	8.8 x 11 x 7'-4"	6.9 x 8¼ x 5'-9"	5.7 x 6¼ x 4'-9"	5.6 x 6½ x 4'-8"

* Provide proper splice pls., bolt holes & finished col. top for future columns. Use upper col. one size smaller except as shown.
▲ See detail on 10-JK4-3 and 4.
■ Splice 3" above slab. See note on 10-JK2-2.
● See detail on 10-JK2-30.

LICENSED PROFESSIONAL ENGINEER LESLIE E. ROBERTSON No. 34360 UNIVERSITY OF THE STATE OF NEW YORK

DRAWN J.A.
REVIEWED E.L.

10-K1-241

A

WORTHINGTON, SKILLING, HELLE & JACKSON — Civil & Structural Engineers

PROJECT: THE WORLD TRADE CENTER | TITLE: COLUMN SCHEDULE | DATE: 5-15-67

REVISIONS
1-6-69
1-17-69
3-1-69
3-12-69
3-21-69
6-13-69
11-27-72

	K51-51	K51-52	K51-53	K51-54	K51-55	K51-56
El. 332'						
El. 310'					*See Dwg Book 13	
El. 294'					14WF370 (Fy=50)	
El. 284'	14WF395 (Fy=50)	14WF395 (Fy=50)				
El. 274'	(See 12-JK1-47)	(See 12-JK1-47)	R girder	R girder		(See 12-JK1-47) 14WF550 (Fy=36)
El. 264'	14WF500 (Fy=42)	14WF500 (Fy=42)		265'-6 7/16"	14WF398 (Fy=50)	
El. 253			14WF342 (Fy=36)	14WF78 (Fy=50)	14WF426 (Fy=50) ▲	
Top of base Pl	El. 248'-0"	El. 248'-0"	El. 248'-0"	El. 241'-0"	El. 241'-0"	
Base Plate	32x3x2'-8"	23x1 3/4x2'-1"	30x2 5/8x2'-6"	28x2 3/8x2'-4"	61x7 1/2x5'-7'	

LICENSED PROFESSIONAL ENGINEER — LESLIE E. ROBERTSON — No. 34360 — UNIVERSITY OF THE STATE OF NEW YORK

DRAWN S.C.
REVIEWED E.L.

* Provide proper splice pls., bolt holes & finished col. top for future columns. Use upper col. one size smaller except as shown.
▲ See detail on 10-JK4-3 and 4.
■ Splice 3" above slab. See note on 10-JK2-2.
● See detail on 10-JK2-30.

10-K1-242

WORTHINGTON, SKILLING, HELLE & JACKSON Civil & Structural Engineers

PROJECT THE WORLD TRADE CENTER | TITLE COLUMN SCHEDULE | DATE 5-15-67

REVISIONS

12-17-68

	K52-1	K52-2	K52-3
El. 332'			
El. 310'	■	10-JK2-17	10-JK2-17
El. 294'	14WF370 (Fy=50)	14WF550 (Fy=50)	14WF398 (Fy=50)
El. 284'			
El. 274'	Temp. bracing ▲ 14WF500 (Fy=50)	Temp. bracing ▲ 14WF605 (Fy=50)	Temp. bracing ▲ 14WF455 (Fy=50)
El. 264'			
El. 253	14WF550 (Fy=50)	14WF730 (Fy=50)	14WF500 (Fy=50)
Top of base Pl	El. 242'-0"	El. 243'-4"	El. 247'-0"
Base Plate	56×6'2×4'-8"	75×9¼×6'-3"	65×7¾×5'-5"

✱ Provide proper splice pls., bolt holes & finished col. top for future columns. Use upper col. one size smaller except as shown.
▲ See detail on 10-JK4-3 and 4.
■ Splice 3" above slab. See note on 10-JK2-2.
● See detail on 10-JK2-30.

10-K1-243

LICENSED PROFESSIONAL ENGINEER LESLIE E. ROBERTSON No. 34360 UNIVERSITY OF THE STATE OF NEW YORK

WORTHINGTON, SKILLING, HELLE & JACKSON — Civil & Structural Engineers

PROJECT: THE WORLD TRADE CENTER | TITLE: COLUMN SCHEDULE | DATE: 5-15-67

REVISIONS
1-6-69
3-1-69
3-12-69
3-21-69
11-27-72

	K53-1	K53-2	K53-3		K53-5	K53-6	K53-7
El. 332'		* See Dwg. Book 13	* See D.B. 13		* See D.B. 13	* See D.B. 13	* See D.B. 13
El. 310'	Street level						
El. 294'	14WF687 (Fy=50)	14WF455 (Fy=50)	14WF320 +⧉ 23×28 (B.S.) (Fy=42)		14WF342 (Fy=50)	14WF320 (Fy=50)	14WF500 (Fy=50)
El. 284'							
El. 274'	14WF119 (Fy=50)	14WF500 (Fy=50)	14WF320 +⧉ 23×3 (B.S.) (Fy=42)		14WF370 (Fy=50)	14WF370 (Fy=50)	14WF550 (Fy=50)
El. 264'	El. 268'-6" Girder	▲	▲		▲	▲	▲
El. 253		14WF550 (Fy=50)	14WF320 +⧉ 24×34 (B.S.) (Fy=42)		14WF426 (Fy=50)	14WF445 (Fy=50)	14WF605 (Fy=46)
Top of base ■		El. 241'-0"	El. 241'-0"		El. 241'-0"	El. 241'-0"	El. 241'-0"
Base Plate		72×9×6'-1"	88×11×7'-4"		64×7½×5'-4"	64×7½×5'-4"	73×9×6'-1"

* Provide proper splice pls., bolt holes & finished col. top for future columns. Use upper col. one size smaller except as shown.
▲ See detail on 10-JK4-3 and 4.
■ Splice 3" above slab. See note on 10-JK2-2.
● See detail on 10-JK2-30.

LICENSED PROFESSIONAL ENGINEER — LESLIE E. ROBERTSON — No. 34360 — UNIVERSITY OF THE STATE OF NEW YORK

DRAWN: S.C.
REVIEWED: E.L.

10-K1-244

WORTHINGTON, SKILLING, HELLE & JACKSON — Civil & Structural Engineers

PROJECT: THE WORLD TRADE CENTER | TITLE: COLUMN SCHEDULE | DATE: 5-15-67

REVISIONS
3-21-69
11-27-72

	K53-8
El. 332'	
El. 310'	
El. 294'	
El. 284'	
El. 274'	
El. 264'	
El. 253	
Top of base Pl at El. 241'	
Base Plate	

✱ Provide proper splice pls., bolt holes & finished col. top for future columns. Use upper col. one size smaller except as shown.
▲ See detail on 10-JK4-3 and 4.
■ Splice 3" above slab. See note on 10-JK2-2.
● See detail on 10-JK2-30.

LICENSED PROFESSIONAL ENGINEER — LESLIE E. ROBERTSON — No. 34360 — UNIVERSITY OF THE STATE OF NEW YORK

DRAWN S.C.
REVIEWED E.L.

10-K1-245

WORTHINGTON, SKILLING, HELLE & JACKSON — Civil & Structural Engineers

PROJECT: THE WORLD TRADE CENTER | TITLE: COLUMN SCHEDULE | DATE: 5-15-67

REVISIONS
1-6-69
1-17-69
3-1-69
3-12-69
3-21-69
6-13-69
11-27-72

	K53-51	K53-52	K53-53	K53-54	K53-55	K53-56	K53-57
El. 332'				*See Dwg. Book 13	*See D.B. 13	*See D.B. 13	*See D.B. 13
El. 310'							
Street level / El. 294'	14WF595 (Fy=50)			14WF370 (Fy=50)	14WF342 (Fy=50)	14WF342 (Fy=50)	14WF342 (Fy=50)
El. 284'		14WF595 (Fy=50)					
El. 274'	(See 12-JK1-47) 14WF550 (Fy=42)			14WF398 (Fy=50)	14WF370 (Fy=50)	14WF370 (Fy=50)	14WF370 (Fy=50)
El. 264'		(See 12-JK1-47) 14WF550 (Fy=42)	Girder El. 265'-6 7/16"				
El. 253			14WF219 (Fy=36)	14WF426 ▲ (Fy=50)	14WF426 ▲ (Fy=50)	14WF426 ▲ (Fy=50)	14WF426 ▲ (Fy=50)
Top of base Pl	El. 248'-0"	El. 248'-0"	El. 248'-0"	El. 241'-0"	El. 241'-0"	El. 241'-0"	El. 241'-0"
Base Plate	32 × 3 × 2'-8"	23 × 1 3/4 × 2'-1"	38 × 3 3/4 × 3'-2"	61 × 7 1/2 × 5'-7"	61 × 7 1/2 × 5'-7"	61 × 7 1/2 × 5'-7"	61 × 7 1/2 × 5'-7"

LICENSED PROFESSIONAL ENGINEER — LESLIE E. ROBERTSON — No. 34360 — UNIVERSITY OF THE STATE OF NEW YORK

DRAWN: S.C.
REVIEWED: E.L.

* Provide proper splice pls., bolt holes & finished col. top for future columns. Use upper col. one size smaller except as shown.
▲ See detail on 10-JK4-3 and 4.
■ Splice 3" above slab. See note on 10-JK2-2.
● See detail on 10-JK2-30.

10-K1-246

WORTHINGTON, SKILLING, HELLE & JACKSON — Civil & Structural Engineers

PROJECT: THE WORLD TRADE CENTER | TITLE: COLUMN SCHEDULE | DATE: 6-13-69

REVISIONS

	K53-58	K53-59					
El. 332'							
El. 310'							
El. 294'							
El. 284'							
El. 274'	(See 12-JK1-47) 14WF605 (Fy=36)	(See 12-JK1-47) 14WF665 (Fy=36)					
El. 264'							
El. 253							
Top of base ▲							
Base Plate							

* Provide proper splice pls., bolt holes & finished col. top for future columns. Use upper col. one size smaller except as shown.
▲ See detail on 10-JK4-3 and 4.
■ Splice 3" above slab. See note on 10-JK2-2.
● See detail on 10-JK2-30.

LICENSED PROFESSIONAL ENGINEER — LESLIE E. ROBERTSON — No. 34360 — UNIVERSITY OF THE STATE OF NEW YORK

DRAWN S.C.
REVIEWED E.L.

10-K1-246.A

WORTHINGTON, SKILLING, HELLE & JACKSON — Civil & Structural Engineers

PROJECT: THE WORLD TRADE CENTER | TITLE: COLUMN SCHEDULE | DATE: 5-15-67

REVISIONS: 12-17-68

	K54-1	K54-2	K54-3
El. 332'			
El. 310'	■	10-JK2-17	10-JK2-17
El. 294'	14WF237 (Fy=50)	14WF500 (Fy=50)	14WF426 (Fy=50)
El. 284'			
El. 274'	Temp. bracing 14WF342 (Fy=50)	Temp. bracing 14WF605 (Fy=50)	Temp. bracing 14WF550 (Fy=50)
El. 264'	▲	▲	▲
El. 253	14WF370 (Fy=50)	14WF605 (Fy=50)	14WF550 (Fy=50)
Top of base *	El. 244'-0"	El. 247'-0"	El. 247'-0"
Base Plate	45 × 4 7/8 × 3'-9"	72 × 8 3/4 × 6'-0"	67 × 8 × 5'-7"

* Provide proper splice pls., bolt holes & finished col. top for future columns. Use upper col. one size smaller except as shown.
▲ See detail on 10-JK4-3 and 4.
■ Splice 3" above slab. See note on 10-JK2-2.
● See detail on 10-JK2-30.

10-K1-247

LICENSED PROFESSIONAL ENGINEER — LESLIE E. ROBERTSON — No. 34360 — UNIVERSITY OF THE STATE OF NEW YORK

A

WORTHINGTON, SKILLING, HELLE & JACKSON Civil & Structural Engineers

PROJECT THE WORLD TRADE CENTER | TITLE COLUMN SCHEDULE | DATE 5-15-67

REVISIONS

12-17-68

	K54-51
El. 332'	
El. 310'	
El. 294'	14WF158 (Fy=50)
El. 284'	
El. 274'	Temp. bracing 14WF228 (Fy=50) ▲
El. 264'	
El. 253	14WF287 (Fy=50)
Top of base Pl	El. 243'-4"
Base Plate	41 × 4'-4 × 3'-5"

■ Provide proper splice pls., bolt holes & finished col. top for future columns. Use upper col. one size smaller except as shown.
▲ See detail on 10-JK4-3 and 4.
■ Splice 3" above slab. See note on 10-JK2-2.
● See detail on 10-JK2-30.

10-K1-248

LICENSED PROFESSIONAL ENGINEER LESLIE E. ROBERTSON No. 34360 UNIVERSITY OF THE STATE OF NEW YORK

WORTHINGTON, SKILLING, HELLE & JACKSON — Civil & Structural Engineers

PROJECT: THE WORLD TRADE CENTER | TITLE: COLUMN SCHEDULE | DATE: 5-15-67

REVISIONS
1-6-69
1-17-69
3-1-69
3-12-69
3-21-69
11-27-72.

	K55-1	K55-2	K55-3	K55-4	K55-5	K55-6	K55-7
El. 332'		*See Dwg. Book 13	*See D.B. 13	*See D.B. 13	*See D.B. 13	*See D.B. 13	
El. 310'							
Splice level	14WF167 (Fy=50)	14WF455 (Fy=50)	14WF320 +2 22x3 (B.S.) (Fy=42)	14WF320 +2 22x2⅜ (Fy=42)	14WF320 +2 22x2⅜ (Fy=42)	14WF320 +2 22x2 (B.S.) (Fy=42)	
El. 294'							
El. 284'	14WF202 (Fy=50)	14WF500 (Fy=50)	14WF320 +2 24x3½ (B.S.) (Fy=42)	14WF320 +2 22x2⅝ (Fy=42)	14WF320 +2 22x2⅝ (Fy=42)	14WF320 +2 22x2¼ (B.S.) (Fy=42)	
El. 274'							
El. 264'	14WF237 (Fy=50)	14WF550 (Fy=50)	▲14WF320 +2 24x3½ (B.S.) (Fy=42)	▲14WF320 +2 23x3 (B.S.) (Fy=42)	▲14WF320 +2 23x3 (B.S.) (Fy=42)	▲14WF320 +2 22x2¾ (B.S.) (Fy=42)	
El. 253							
Top of base Pl	El. 248'-0"	El. 241'-0"	El. 241'-0"	El. 241'-0"	El. 241'-0"	El. 241'-0"	
Base Plate	47 x 5⅛ x 3'-11"	73 x 9 x 6'-1"	88 x 11 x 7'-4"	83 x 10¼ x 6'-11"	83 x 10⅛ x 6'-11"	79 x 9¾ x 6'-7"	

* Provide proper splice pls., bolt holes & finished col. top for future columns. Use upper col. one size smaller except as shown.
▲ See detail on 10-JK4-3 and 4.
■ Splice 3" above slab. See note on 10-JK2-2.
● See detail on 10-JK2-30.

LICENSED PROFESSIONAL ENGINEER — LESLIE E. ROBERTSON — No. 34360 — UNIVERSITY OF THE STATE OF NEW YORK

DRAWN S.C.
REVIEWED E.L.

10-K1-249

WORTHINGTON, SKILLING, HELLE & JACKSON — Civil & Structural Engineers

PROJECT: THE WORLD TRADE CENTER | TITLE: COLUMN SCHEDULE | DATE: 5-15-67

REVISIONS
1-6-69
3-1-69
3-12-69
3-21-69
6-13-69

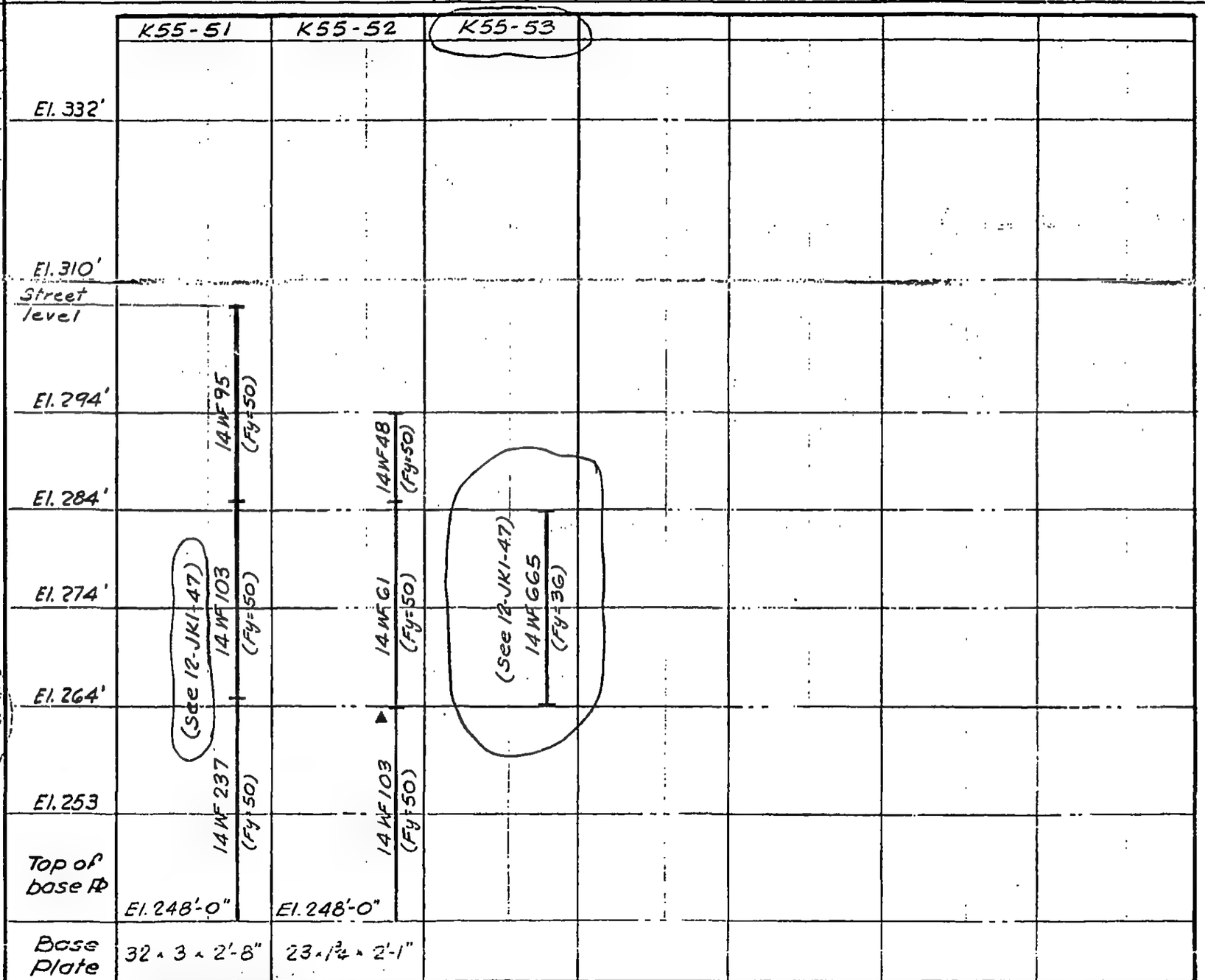

✱ Provide proper splice pls., bolt holes & finished col. top for future columns. Use upper col. one size smaller except as shown.
▲ See detail on 10-JK4-3 and 4.
■ Splice 3" above slab. See note on 10-JK2-2.
● See detail on 10-JK2-30.

LICENSED PROFESSIONAL ENGINEER — LESLIE E. ROBERTSON — No. 34360 — UNIVERSITY OF THE STATE OF NEW YORK

DRAWN S.C.
REVIEWED E.L.

10-K1-250

WORTHINGTON, SKILLING, HELLE & JACKSON Civil & Structural Engineers

PROJECT THE WORLD TRADE CENTER | TITLE COLUMN SCHEDULE | DATE 5-15-67

REVISIONS

12-17-68

	K5G-1	K5G-2
El. 332'		
El. 310'	10-JK2-17	10-JK2-17
El. 294'	14WF500 (Fy=50)	14WF455 (Fy=50)
El. 284'		
El. 274'	Temp. bracing 14WF500 (Fy=50)	Temp. bracing 14WF550 (Fy=50)
El. 264'	▲	▲
El. 253	14WF550 (Fy=50)	14WF550 (Fy=50)
Top of base Pl	El. 247'-0"	El. 247'-0"
Base Plate	67×8×5'-7"	67×8×5'-7"

LICENSED PROFESSIONAL ENGINEER LESLIE E. ROBERTSON No. 34360 UNIVERSITY OF THE STATE OF NEW YORK

✱ Provide proper splice pls., bolt holes & finished col. top for future columns. Use upper col. one size smaller except as shown.
▲ See detail on 10-JK4-3 and 4.
■ Splice 3" above slab. See note on 10-JK2-2.
● See detail on 10-JK2-30.

10-K1-251

WORTHINGTON, SKILLING, HELLE & JACKSON — Civil & Structural Engineers

PROJECT: THE WORLD TRADE CENTER | TITLE: COLUMN SCHEDULE | DATE: 5-15-67

REVISIONS
6-11-68
6-28-68

	K56-51	K56-52	K56-53
El. 332'			
El. 310'			
El. 294'			
El. 284'	14 WF 184 (Fy=50)		
El. 274'			
El. 264'	14 WF 314 (Fy=50)	14 Girder	12 Girder
El. 253	▲ 14 WF 314 (Fy=50)	14 WF 111 (Fy=50)	14 WF 176
Top of base ■	El. 241'-0"	El. 243'-4"	El. 243'-4"
Base Plate	30 x 30 x 4'-3"	20 x 20 x 2'-3"	31 x 30 x 3'-3"

* Provide proper splice pls., bolt holes & finished col. top for future columns. Use upper col. one size smaller except as shown.
▲ See detail on 10-JK4-3 and 4.
■ Splice 3" above slab. See note on 10-JK2-2.
● See detail on 10-JK2-30.

10-K1-252

LICENSED PROFESSIONAL ENGINEER — LESLIE E. ROBERTSON — No. 35360 — UNIVERSITY OF THE STATE

WORTHINGTON, SKILLING, HELLE & JACKSON — Civil & Structural Engineers

PROJECT: THE WORLD TRADE CENTER | TITLE: COLUMN SCHEDULE | DATE: 5-15-67

REVISIONS
10-15-68
1-6-69
3-1-69
3-12-69
3-21-69
11-27-72

	K57-1	K57-2	K57-3	K57-4	K57-5	K57-6	K57-7
El. 332'							
El. 310'		14WF500 (Fy=50) See Dwg. Book 13		See D.B. 13	See D.B. 13	See D.B. 13	
El. 294'	1'-0" ℄ Girder 8'-8"	El. 309'-8" 1'-0" ℄ Girder 8'-8"	1'-0" ℄ Girder 8'-8"	Part of TRUSS KT-3	14WF320 +℄ 22x1 5/8 (B.S.) (Fy=42)	14WF455 (Fy=50)	
El. 284'	14WF342 (Fy=50)		14WF370 (Fy=50)	14WF320 (Fy=50)		14WF320 +℄ 22x1½ (B.S.) (Fy=42) 36WF (12-JK1-24)	
El. 274'	14WF370 (Fy=50)	14WF95 (Fy=50)	14WF398 (Fy=50)	14WF342 (Fy=50)	14WF320 +℄ 22x2 (B.S.) (Fy=42)	14WF320 +℄ 22x1-¾ (B.S.) (Fy=42)	
El. 264'		See Detail 10-JK2-35		14WF550 (Fy=50) ▲	14WF320 +℄ 22x2½ (B.S.) ▲ (Fy=42)		
El. 253	▲ 14WF500 (Fy=50)		▲ 14WF455 (Fy=50)	14WF320 +℄ 22x2½ (B.S.) (Fy=42)		14WF320 +℄ 22x2⅜ (B.S.) ▲ (Fy=42)	
Top of base ℄	El. 248'-0"		El. 241'-0"	El. 241'-0"	El. 241'-0"	El. 241'-0"	
Base Plate	82 x 7¼ x 5'-2"		66 x 8 x 5'-6"	75 x 9¼ x 6'-3"	78 x 9¾ x 6'-6"	76 x 9¼ x 6'-4"	

LICENSED PROFESSIONAL ENGINEER — LESLIE E. ROBERTSON — No. 34360 — UNIVERSITY OF THE STATE OF NEW YORK

DRAWN S.C.
REVIEWED E.L.

✱ Provide proper splice pls., bolt holes & finished col. top for future columns. Use upper col. one size smaller except as shown.
▲ See detail on 10-JK4-3 and 4.
■ Splice 3" above slab. See note on 10-JK2-2.
● See detail on 10-JK2-30.

10-K1-253

WORTHINGTON, SKILLING, HELLE & JACKSON Civil & Structural Engineers

PROJECT THE WORLD TRADE CENTER | TITLE COLUMN SCHEDULE | DATE 5-15-67

REVISIONS
6-11-68
10-15-68
1-6-69
3-1-69
3-12-69
3-21-69

	K57-51	K57-52	K57-53
El. 332'			
El. 310' Street level			
El. 294'	14 WF 95 (Fy=50)	14 WF 43 (Fy=42)	
El. 284'			
El. 274'	14 WF 103 (Fy=50)	14 WF 87 (Fy=50)	Part of Truss KT-3
El. 264'			
El. 253	▲ 14 WF 167 (Fy=50)	▲ 14 WF 87 (Fy=50)	14 WF 370 (Fy=50)
Top of base ℄	El. 248'-0"	El. 248'-0"	El. 241'-0"
Base Plate	32 × 3 × 2'-8"	23 × 1¾ × 2'-1"	59 × 7 × 4'-11"

✱ Provide proper splice pls., bolt holes & finished col. top for future columns. Use upper col. one size smaller except as shown.
▲ See detail on 10-JK4-3 and 4.
■ Splice 3" above slab. See note on 10-JK2-2.
● See detail on 10-JK2-30.

LICENSED PROFESSIONAL ENGINEER LESLIE E. ROBERTSON No. 34360 UNIVERSITY OF THE STATE OF NEW YORK

DRAWN S.C.
REVIEWED E.L.

10-KI-254

WORTHINGTON, SKILLING, HELLE & JACKSON — Civil & Structural Engineers

PROJECT: THE WORLD TRADE CENTER | TITLE: COLUMN SCHEDULE | DATE: 5-15-67

REVISIONS

6-11-68

	K58-1	K58-2	K58-3	K58-4	K58-5	K58-6	K58-7
El. 332'							
El. 310'							
STEEL							
El. 294'	14 WF 176 (Fy = 50)	14 WF 176 (Fy = 50)	14 WF 176 (Fy = 50)	14 WF 176 (Fy = 50)	14 WF 176 (Fy = 50)	14 WF 176 (Fy = 50)	14 WF 176 (Fy = 50)
El. 284'							
El. 274'	14 WF 246 (Fy = 50)	14 WF 246 (Fy = 50)	14 WF 246 (Fy = 50)	14 WF 342 (Fy = 50)	14 WF 342 (Fy = 50)	R. Girder 14 WF 228 (Fy = 50)	14 WF 342 (Fy = 50)
El. 264'							
El. 253	▲ 14 WF 287 (Fy = 50)	▲ 14 WF 287 (Fy = 50)	▲ 14 WF 287 (Fy = 50)	▲ 14 WF 342 (Fy = 50)	▲ 14 WF 342 (Fy = 50)		▲ 14 WF 342 (Fy = 50)
Top of base Pl	El. 241'-0"	El. 241'-0"	El. 241'-0"	El. 241'-0"	El. 241'-0"		El. 241'-0"
Base Plate	31 x 6¼ x 4'-1"	31 x 6¼ x 4'-7"	31 x 6¼ x 4'-7"	47 x 5⅜ x 4'-5"	47 x 5 x 4'-3"		47 x 5 x 4'-3"

* Provide proper splice pls., bolt holes & finished col. top for future columns. Use upper col. one size smaller except as shown.
▲ See detail on 10-JK4-3 and 4.
■ Splice 3" above slab. See note on 10-JK2-2.
● See detail on 10-JK2-30.

10-K1-255

LICENSED PROFESSIONAL ENGINEER — LESLIE E. ROBERTSON — No. 34360 — UNIVERSITY OF THE STATE OF NEW YORK

A

WORTHINGTON, SKILLING, HELLE & JACKSON — Civil & Structural Engineers

PROJECT: THE WORLD TRADE CENTER | TITLE: COLUMN SCHEDULE | DATE: 5-15-67

REVISIONS
6-11-68
6-28-68
9-4-68

	K58-8	K58-9	K58-10				
El. 332'							
El. 310'							
El. 294'	14 WF 184 (Fy=50)	14 WF 142 (Fy=50)	14 WF 105 (Fy=50)				
El. 284'							
El. 274'							
El. 264'	2 Girder 14 WF 257 (Fy=50)	14 WF 314 (Fy=50)	14 WF 223 (Fy=50)				
El. 253		▲ 14 WF 314 (Fy=50)	▲ 14 WF 228 (Fy=50)				
Top of base ■		El. 247'-0"	El. 247'-0"				
Base Plate		44 x 40 x 3-11	37 x 36 x 3-4				

* Provide proper splice pls., bolt holes & finished col. top for future columns. Use upper col. one size smaller except as shown.
▲ See detail on 10-JK4-3 and 4.
■ Splice 3" above slab. See note on 10-JK2-2.
● See detail on 10-JK2-30.

10-K1-256

LICENSED PROFESSIONAL ENGINEER — LESLIE E. ROBERTSON — No. 34360 — UNIVERSITY OF THE STATE OF NEW YORK

WORTHINGTON, SKILLING, HELLE & JACKSON — Civil & Structural Engineers

PROJECT: THE WORLD TRADE CENTER | TITLE: COLUMN SCHEDULE | DATE: 5-15-67

REVISIONS

6-11-68

	K58-51	K58-52	K58-53	K58-54	K58-55		
El. 332'							
El. 310'							
El. 294'							
El. 284'							
El. 274'							
El. 264'	12 Girder	12 Girder	12 Girder	12 Girder	12 Girder		
El. 253	14 WF 119 (Fy = 50)	14 WF 119 (Fy = 50)	14 WF 228 (Fy = 50)	14 WF 176 (Fy = 50)	14 WF 150 (Fy = 50)		
Top of base Pl	El. 241'-0"	El. 243'-4"	El. 243'-4"	El. 243'-4"	El. 243'-4"		
Base Plate	33 x 3 1/8 x 2'-11"	27 x 2 1/2 x 2'-1"	37 x 4 x 3'-6"	37 x 3 5/8 x 3'-3"	33 x 3 x 2'-11"		

* Provide proper splice pls., bolt holes & finished col. top for future columns. Use upper col. one size smaller except as shown.
▲ See detail on 10-JK4-3 and 4.
■ Splice 3" above slab. See note on 10-JK2-2.
⊖ See detail on 10-JK2-30.

10-K1-257

LICENSED PROFESSIONAL ENGINEER — LESLIE E. ROBERTSON — No. 34360 — UNIVERSITY OF THE STATE OF NEW YORK

WORTHINGTON, SKILLING, HELLE & JACKSON — Civil & Structural Engineers

PROJECT: THE WORLD TRADE CENTER | TITLE: COLUMN SCHEDULE | DATE: 5-15-67

REVISIONS
6-11-68
9-4-68

	K59-1	K59-2	K59-3	K59-4	K59-5
El. 332'					
El. 310'				14WF87 (Fy=50)	
Street					
El. 294'	14WF119 (Fy=50)	14WF119 (Fy=50)	14WF103 (Fy=50)	℄ Girder K5A	14WF127 (Fy=50)
El. 284'				14WF158 (Fy=50)	
El. 274'			Truss KT-3		
El. 264'	14WF246 (Fy=50)	14WF246 (Fy=50)		14WF228 (Fy=50)	14WF184 (Fy=50)
El. 253	▲ 14WF246 (Fy=50)	▲ 14WF246 (Fy=50)		▲ 14WF237 (Fy=50)	▲ 14WF228 (Fy=50)
Top of base ℄	El. 248'-0"	El. 245'-0"		El. 241'-0"	El. 241'-0"
Base Plate	41 × 4 1/2 × 3'-8"	40 × 4 × 3'-7"		48 × 5 5/8 × 4'-3"	46 × 5 3/8 × 4'-1"

LICENSED PROFESSIONAL ENGINEER — LESLIE E. ROBERTSON — No. 34360 — UNIVERSITY OF THE STATE OF NEW YORK

✱ Provide proper splice pls., bolt holes & finished col. top for future columns. Use upper col. one size smaller except as shown.
▲ See detail on 10-JK4-3 and 4.
■ Splice 3" above slab. See note on 10-JK2-2.
● See detail on 10-JK2-30.

10-K1-258

9

WORTHINGTON, SKILLING, HELLE & JACKSON — Civil & Structural Engineers

PROJECT: THE WORLD TRADE CENTER | TITLE: COLUMN SCHEDULE | DATE: 5-15-67

REVISIONS: 6-11-68

	K-59-51						
El. 332'							
El. 310'							
Street							
El. 294'	14WF78 (Fy=42)						
El. 284'							
El. 274'							
El. 264'	14WF158 (Fy=50)						
El. 253	14WF158 (Fy=50)						
Top of base PL	El. 248'-0"						
Base Plate	31 × 2⅞ × 2'-10"						

* Provide proper splice pls., bolt holes & finished col. top for future columns. Use upper col. one size smaller except as shown.
▲ See detail on 10-JK4-3 and 4.
■ Splice 3" above slab. See note on 10-JK2-2.
● See detail on 10-JK2-30.

10-K1-259

LICENSED PROFESSIONAL ENGINEER — LESLIE E. ROBERTSON — No. 34360 — UNIVERSITY OF THE STATE OF NEW YORK

8

A

WORTHINGTON, SKILLING, HELLE & JACKSON — Civil & Structural Engineers

PROJECT: THE WORLD TRADE CENTER | TITLE: COLUMN SCHEDULE | DATE: 5-15-67

REVISIONS: 6-11-68

	K60-1	K60-2	K60-3	K60-4	K60-5	K60-6	K60-7
El. 332'							
El. 310' Street							
El. 294'	14WF111 (Fy=50)	14WF111 (Fy=50)	14WF111 (Fy=50)	14WF111 (Fy=50)	14WF111 (Fy=50)	14WF119 (Fy=50)	14WF119 (Fy=50)
El. 284'							
El. 274'							
El. 264'	14WF167 (Fy=50)	14WF167 (Fy=50)	14WF142 (Fy=50)	14WF237 (Fy=50)	14WF237 (Fy=50)	14WF176 (Fy=50)	14WF264 (Fy=50)
El. 253	▲ 14WF211 (Fy=50)	▲ 14WF211 (Fy=50)	@ Girder	▲ 14WF237 (Fy=50)	▲ 14WF237 (Fy=50)	@ Girder	▲ 14WF264 (Fy=50)
Top of base ✱	El. 241'-0"	El. 241'-0"		El. 244'-0"	El. 244'-0"		El. 244'-0"
Base Plate	44 × 4 5/8 × 3'-11"	44 × 4 7/8 × 3'-10"		40 × 4 × 3'-7"	40 × 4 × 3'-7"		41 × 4 5/8 × 3'-6"

✱ Provide proper splice pls., bolt holes & finished col. top for future columns. Use upper col. one size smaller except as shown.
▲ See detail on 10-JK4-3 and 4.
■ Splice 3" above slab. See note on 10-JK2-2.
● See detail on 10-JK2-30.

10-K1-260

LICENSED PROFESSIONAL ENGINEER — LESLIE E. ROBERTSON — No. 34360 — UNIVERSITY OF THE STATE OF NEW YORK

WORTHINGTON, SKILLING, HELLE & JACKSON — Civil & Structural Engineers

PROJECT: THE WORLD TRADE CENTER | TITLE: COLUMN SCHEDULE | DATE: 5-15-67

REVISIONS
6-11-68
9-4-68

	K60-8	K60-9	K60-10	K60-11			
El. 332'							
El. 310'							
Street							
El. 294'	14WF119 (Fy=50)	14WF127 (Fy=50)	14WF127 (Fy=50)	14WF136 (Fy=50)			
El. 284'							
El. 274'							
El. 264'	14WF167 (Fy=50)	14WF287 (Fy=50)	14WF287 (Fy=50)	14WF287 (Fy=50)			
El. 253	12 Girder	▲ 14WF287 (Fy=50)	▲ 14WF287 (Fy=50)	▲ 14WF287 (Fy=50)			
Top of base ✱		El. 243'-4"	El. 247'-0"	El. 247'-0"			
Base Plate		43 × $4\frac{3}{8}$ × 3'-10"	43 × $4\frac{3}{4}$ × 3'-10"	44 × $4\frac{7}{8}$ × 3'-11"			

✱ Provide proper splice pls., bolt holes & finished col. top for future columns. Use upper col. one size smaller except as shown.
▲ See detail on 10-JK4-3 and 4.
■ Splice 3" above slab. See note on 10-JK2-2.
● See detail on 10-JK2-30.

10-K1-261

LICENSED PROFESSIONAL ENGINEER
LESLIE E. ROBERTSON
No. 34350
UNIVERSITY OF THE STATE OF NEW YORK

WORTHINGTON, SKILLING, HELLE & JACKSON — Civil & Structural Engineers

PROJECT: THE WORLD TRADE CENTER | TITLE: COLUMN SCHEDULE | DATE: 5-15-67

REVISIONS

6-11-68

	K60-52	K60-53	K60-54	K60-55	K60-56	K60-57
El. 332'						
El. 310'						
El. 294'						
El. 284'						
El. 274'						
El. 264'		℄ Girder	℄ Girder	℄ Girder	℄ Girder	℄ Girder	℄ Girder
El. 253		14WF176 (Fy-50)	14WF103 (Fy-50)	14WF150 (Fy-50)	14WF119 (Fy-50)	14WF78 (Fy-42)	14WF78 (Fy-42)
Top of base ℄		El. 244'-0"	El. 243'-6"	El. 243'-10"	El. 243'-4"	El. 243'-4"	El. 243'-4"
Base Plate		37 × 3⅝ × 3'-3"	26 × 2⅝ × 2'-7"	33 × 3 × 2'-11"	29 × 2½ × 2'-7"	19 × 1½ × 1'-10"	19 × 1½ × 1'-10"

* Provide proper splice pls., bolt holes & finished col. top for future columns. Use upper col. one size smaller except as shown.
▲ See detail on 10-JK4-3 and 4.
■ Splice 3" above slab. See note on 10-JK2-2.
● See detail on 10-JK2-30.

10-K1-262

LICENSED PROFESSIONAL ENGINEER — LESLIE E. ROBERTSON — No. 34360 — REGISTERED IN THE STATE OF NEW YORK

WORTHINGTON, SKILLING, HELLE & JACKSON — Civil & Structural Engineers

PROJECT: THE WORLD TRADE CENTER | TITLE: COLUMN SCHEDULE | DATE: 5-15-67

REVISIONS
6-11-68
9-4-68

	K61-1	K61-2	K61-3	K61-4	K61-5	K61-6	K61-7
El. 332'							
El. 310'					14WF87 (Fy=50)		
El. 294'				14WF87 (Fy=50)	Pl-Girder K5A		
El. 284'	14WF87 (Fy=50)	14WF103 (Fy=50)	14WF87 (Fy=50)			14WF103 (Fy=50)	14WF103 (Fy=50)
El. 274'				Truss KT-3	See Detail 10-JK2-35 14WF95 (Fy=50)		
El. 264'	14WF158 (Fy=50)	14WF228 (Fy=50)	14WF193 (Fy=50)			14WF228 (Fy=50)	14WF228 (Fy=50)
El. 253	14WF158 (Fy=50)	14WF228 (Fy=50)	14WF193 (Fy=50)	14WF211 (Fy=50)		See Detail 10-JK4-4B 14WF228 (Fy=50)	14WF228 (Fy=50)
Top of base Pl	El. 248'-0"	El. 248'-0"	El. 248'-0"	El. 246'-0"		El. 245'-0"	El. 244'-4"
Base Plate	31 × 2 7/8 × 2'-10"	37 × 3 5/8 × 3'-4"	35 × 3 3/8 × 3'-1"	42 × 4 × 3'-6"		39 × 3 7/8 × 3'-6"	37 × 3 5/8 × 3'-4"

* Provide proper splice pls., bolt holes & finished col. top for future columns. Use upper col. one size smaller except as shown.
▲ See detail on 10-JK4-3 and 4.
■ Splice 3" above slab. See note on 10-JK2-2.
● See detail on 10-JK2-30.

10-K1-264

LICENSED PROFESSIONAL ENGINEER — LESLIE E. ROBERTSON — No. 34360 — UNIVERSITY OF THE STATE OF NEW YORK

WORTHINGTON, SKILLING, HELLE & JACKSON Civil & Structural Engineers

PROJECT THE WORLD TRADE CENTER | TITLE COLUMN SCHEDULE | DATE 5-15-67

REVISIONS

6-11-68

	K61-8	K61-9	K61-10
El. 332'			
El. 310' Street			
El. 294'			
El. 284'	14WF103 (Fy=50)	14WF103 (Fy=50)	14WF111 (Fy=50)
El. 274'			
El. 264'	14WF150 (Fy=50)	14WF150 (Fy=50)	14WF237 (Fy=50) ▲
El. 253	℄ Girder	℄ Girder	14WF237 (Fy=50)
Top of base ℄			El. 243'-4"
Base Plate			39 x 4 x 3'-0"

* Provide proper splice pls., bolt holes & finished col. top for future columns. Use upper col. one size smaller except as shown.
▲ See detail on 10-JK4-3 and 4.
■ Splice 3" above slab. See note on 10-JK2-2.
● See detail on 10-JK2-30.

10-K1-265

LICENSED PROFESSIONAL ENGINEER LESLIE E. ROBERTSON No. 34360 UNIVERSITY OF THE STATE OF NEW YORK

WORTHINGTON, SKILLING, HELLE & JACKSON Civil & Structural Engineers

PROJECT THE WORLD TRADE CENTER | TITLE COLUMN SCHEDULE | DATE 5-15-67

REVISIONS
6-11-68
9-4-68

	KG1-51	KG1-52	KG1-53	KG1-54
El. 332'				
El. 310'				
El. 294'		℄ Girder K5A		
El. 284'		14WF167 (Fy=50)	14WF103 (Fy=50)	14WF103 (Fy=50)
El. 274'	Part of Truss KT-3			
El. 264'		14WF314 (Fy=50)	14WF228 (Fy=50)	14WF228 (Fy=50)
El. 253	14WF87 (Fy=50)	▲ 14WF314 (Fy=50)	▲ 14WF228 (Fy=50)	▲ 14WF228 (Fy=50)
Top of base PL	El. 245'-0"	El. 245'-0"	El. 244'-7"	El. 243'-4"
Base Plate	27 × 2¼ × 2'-3"	45 × 4⅝ × 3'-9"	37 × 3⅝ × 3'-1"	39 × 4 × 3'-6"

* Provide proper splice pls., bolt holes & finished col. top for future columns. Use upper col. one size smaller except as shown.
▲ See detail on 10-JK4-3 and 4.
▬ Splice 3" above slab. See note on 10-JK2-2.
● See detail on 10-JK2-30.

LICENSED PROFESSIONAL ENGINEER LESLIE E. ROBERTSON No. 34360 UNIVERSITY OF THE STATE OF NEW YORK

10-K1-266

WORTHINGTON, SKILLING, HELLE & JACKSON Civil & Structural Engineers

PROJECT THE WORLD TRADE CENTER | TITLE COLUMN SCHEDULE | DATE 5-15-67

REVISIONS
6-11-68
9-4-68

	K62-1	K62-2	K62-3	K62-4	K62-5	K62-6	
El. 332'							
El. 310' Struct.							
El. 294'							
El. 284'	14 WF 111 (Fy=50)	14 WF 111 (Fy=50)	14 WF 111 (Fy=50)	14 WF 111 (Fy=50)	14 WF 119 (Fy=50)	14 WF 78 (Fy=50)	
El. 274'	℄ Girder 14 WF 150 (Fy=50)	14 WF 237 (Fy=50)	14 WF 246 (Fy=50)	14 WF 246 (Fy=50)	14 WF 264 (Fy=50)	14 WF 167 (Fy=50)	
El. 264'		▲ 14 WF 237 (Fy=50)	▲ 14 WF 246 (Fy=50)	▲ 14 WF 246 (Fy=50)	▲ 14 WF 264 (Fy=50)	▲ 14 WF 167 (Fy=50)	
El. 253							
Top of base ℄		14 WF 237 (Fy=50)	14 WF 246 (Fy=50)	14 WF 246 (Fy=50)	14 WF 264 (Fy=50)	14 WF 167 (Fy=50)	
		El. 247'-0"	El. 247'-0"	El. 214'-0"	El. 247'-0"	El. 247'-0"	
Base Plate		40 x 4 x 3'-7"	40 x 4 x 3'-7"	40 x 4 x 3'-7"	41 x 4 x 3'-8"	32 x 3 x 2'-10"	

* Provide proper splice pls., bolt holes & finished col. top for future columns. Use upper col. one size smaller except as shown.
▲ See detail on 10-JK4-3 and 4.
■ Splice 3" above slab. See note on 10-JK2-2.
● See detail on 10-JK2-30.

LICENSED PROFESSIONAL ENGINEER LESLIE E. ROBERTSON No. 34360 UNIVERSITY OF THE STATE OF NEW YORK

16

10-K1-267

WORTHINGTON, SKILLING, HELLE & JACKSON — Civil & Structural Engineers

PROJECT: THE WORLD TRADE CENTER | TITLE: COLUMN SCHEDULE | DATE: 5-15-67

REVISIONS: 6-11-68

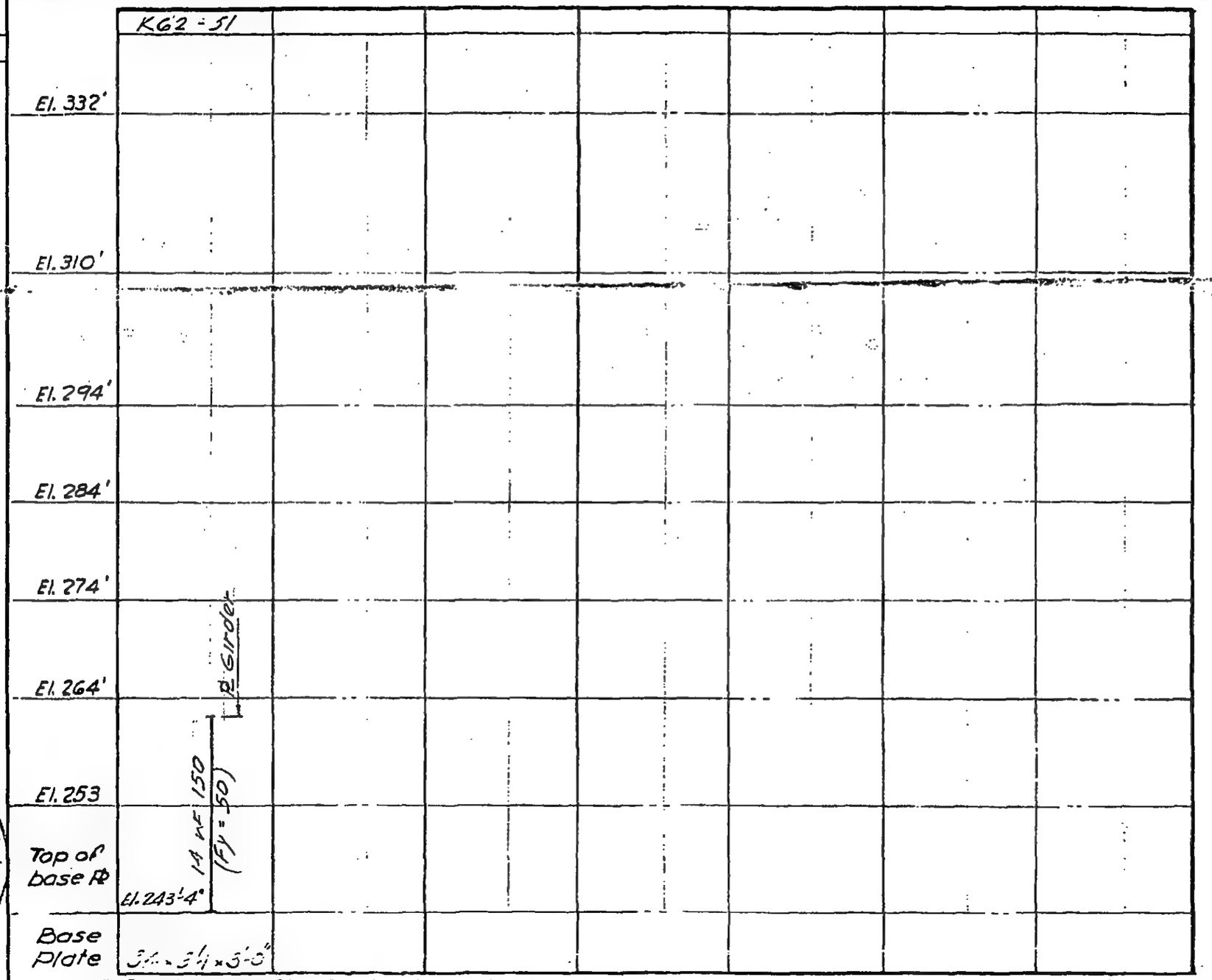

✱ Provide proper splice pls., bolt holes & finished col. top for future columns. Use upper col. one size smaller except as shown.
▲ See detail on 10-JK4-3 and 4.
■ Splice 3" above slab. See note on 10-JK2-2.
⊖ See detail on 10-JK2-30.

10-K1-268

LICENSED PROFESSIONAL ENGINEER — LESLIE E. ROBERTSON — No. 34360 — UNIVERSITY OF THE STATE OF NEW YORK

WORTHINGTON, SKILLING, HELLE & JACKSON Civil & Structural Engineers

PROJECT THE WORLD TRADE CENTER | TITLE COLUMN SCHEDULE ZONE K 2 | DATE 5-15-61

REVISIONS
6-7-68

REVISIONS
6-28-68

	K70-3	K70-4	K70-5	K70-6	K70-7
El. 332'					
El. 310'					
El. 290'	14WF211 (Fy=50)	14WF237 (Fy=50)	14WF228 (Fy=50)	14WF237 (Fy=50)	14 WF 142 (Fy=50)
El. 279'-3"					
El. 264'	14WF342 (Fy=50)	14WF342 (Fy=50)	14WF370 (Fy=50)	14WF370 (Fy=50)	14WF264 (Fy=50)
El. 253					
Top of Base Pl. at El. 241'					

LICENSED PROFESSIONAL ENGINEER LESLIE E. ROBERTSON No. 34360 UNIVERSITY OF THE STATE OF NEW YORK

LICENSED PROFESSIONAL ENGINEER LESLIE E. ROBERTSON No. 34360 UNIVERSITY OF THE STATE OF NEW YORK

WORTHINGTON, SKILLING, HEL

PROJECT THE WORLD TRADE CENT.

	K71-8	K71-
El. 332'		
El. 310'		
El. 290'	14WF228 (Fy=50)	
El. 279'-3"		
El. 264'		
El. 253	14WF550 (Fy=50)	
Top of Base Pl. at El. 241'		
Base		

MICROCARD CORRECTION GUIDE (M-9)

CORRECTION

The preceding document has been re-photographed to assure legibility and its image appears immediately hereafter.

WORTHINGTON, SKILLING, HELLE & JACKSON — Civil & Structural Engineers

PROJECT: THE WORLD TRADE CENTER | TITLE: COLUMN SCHEDULE ZONE K 2 | DATE: 5-15-67

REVISIONS
6-7-68

	K70-3	K70-4	K70-5	K70-6	K70-7
El. 332'					
El. 310'					
El. 290'	14WF211 (Fy=50)	14WF237 (Fy=50)	14WF226 (Fy=50)	14WF237 (Fy=50)	14 WF 142 (Fy=50)
El. 279'-3"	+	+	+	+	+
El. 264'	14WF342 (Fy=50)	14WF342 (Fy=50)	14WF370 (Fy=50)	14WF370 (Fy=50)	14WF264 (Fy=50)
El. 253					
Top of Base Pl. at El. 241'					
Base Plate	51x5⅞x4'-7"	53x6½x4'-9"	53x6½x4'-9"	57x6¾x5'-1"	50x6x4'-5"

* Provide proper splice pls., bolt holes & finished col. top for future columns. Use upper col. one size smaller except as shown.
▲ See detail on 10-JK4-3 and 4.
= Splice 3" above slab. See note on 10-JK2-2.
● See detail on 10-JK2-30.

10-K1-269

LICENSED PROFESSIONAL ENGINEER — LESLIE E. ROBERTSON — No. 34360 — UNIVERSITY OF THE STATE OF NEW YORK

WORTHINGTON, SKILLING, HELLE & JACKSON — Civil & Structural Engineers

PROJECT: THE WORLD TRADE CENTER | TITLE: COLUMN SCHEDULE | DATE: 5-15-67

REVISIONS
6-7-68
6-28-68

	K71-8	K71-9	K71-10	K71-11	K71-12	K71-13	
El. 332'							
El. 310'							
El. 290'	14 WF 228 (Fy=50)	14 WF 246 (Fy=50)	14 WF 264 (Fy=50)	14 WF 211 (Fy=50)	14 WF 193 (Fy=50)	14 WF 95 (Fy=50)	
El. 279'-3"							
El. 264'			14 WF 550 (Fy=50)	14 WF 455 (Fy=50)			
El. 253	14 WF 550 (Fy=50)	14 WF 550 (Fy=50)	14 WF 550 (Fy=50)	14 WF 455 (Fy=50)	14 WF 426 (Fy=50)	14 WF 264 (Fy=50)	
Top of Base Pl. at El. 241'							
Base Plate	55 × 6½ × 4'-11"	57 × 6¾ × 5'-1"	59 × 7 × 5'-5"	55 × 6½ × 5'-0"	49 × 5⅝ × 4'-5"	38 × 3¾ × 3'-4"	

* Provide proper splice pls., bolt holes & finished col. top for future columns. Use upper col. one size smaller except as shown.
▲ See detail on 10-JK4-3 and -4.
▬ Splice 3" above slab. See note on 10-JK2-2.
● See detail on 10-JK2-30.

LICENSED PROFESSIONAL ENGINEER — LESLIE E. ROBERTSON — No. 34360 — UNIVERSITY OF THE STATE OF NEW YORK

10-K1-270

C

WORTHINGTON, SKILLING, HELLE & JACKSON — Civil & Structural Engineers

PROJECT: THE WORLD TRADE CENTER | TITLE: COLUMN SCHEDULE Zone K-2 | DATE: 5-15-67

REVISIONS
6-7-68
6-28-68

	K72-13	K72-14	K72-15	K72-16	K72-17	K72-18
El. 332'						
El. 310'						
El. 290'				14WF211 (Fy=50)	14WF193 (Fy=50)	14WF127 (Fy=50)
El. 279'-3"	14WF78 (Fy=42)	14WF78 (Fy=42)	14WF211 (Fy=50)			
El. 264'	Temp. bracing	Temp. bracing		14WF455 (Fy=50)	14WF426 (Fy=50)	14WF314 (Fy=50)
El. 253	20x12 I 2-PL's 12x5 1-PL 10x3 (Fy=50)	20x12 I 2-PL's 12x5 1-PL 10x3 (Fy=50)	14WF211 (Fy=50) ▲	14WF455 (Fy=50) ▲	14WF426 (Fy=50) ▲	14WF314 (Fy=50) ▲
Top of Base Pl.	El. 243'-4"	El. 243'-4"	El. 243'-4"	El. 243'-4"	El. 243'-4"	El. 243'-4"
Base Plate	39x4½x3'-5"	39x4½x3'-5"	39x3¾x3'-5"	53x5x4'-9"	49x3⅝x4'-5"	42x4⅝x3'-8"

✱ Provide proper splice pls., bolt holes & finished col. top for future columns. Use upper col. one size smaller except as shown.
▲ See detail on 10-JK4-3 and 4.
■ Splice 3" above sleb. See note on 10-JK2-2.
● See detail on 10-JK2-30.

10-K1-271

LICENSED PROFESSIONAL ENGINEER — LESLIE E. ROBERTSON — No. 34200 — UNIVERSITY OF ILL.

WORTHINGTON, SKILLING, HELLE & JACKSON — Civil & Structural Engineers

PROJECT: THE WORLD TRADE CENTER | TITLE: COLUMN SCHEDULE | DATE: 5-15-67

REVISIONS
6-7-68
6-28-68

	K73-13	K73-14	K73-15	K73-16	K73-17	K73-18	K73-19
El. 332'							
El. 310'							
El. 290'	14 WF 264 (Fy=50)	14 WF 264 (Fy=50)	14 WF 287 (Fy=50)		14 WF 264 (Fy=50)		14 WF 193 (Fy=50)
El. 279'-3"	⊠	⊠		14 WF 167 (Fy=50)			
El. 264'	Temp. Bracing	Temp. Bracing	Temp. Bracing	14 WF 314 (Fy=50)	14 WF 550 (Fy=50)	14 WF 87 (Fy=50)	14 WF 455 (Fy=50)
El. 253	20 x 12 II 2 PL 12 x 5 2 PL 10 x 4 (Fy=50)	20 x 12 II 2 PL 12 x 5 2 PL 10 x 4 (Fy=50)	14 WF 426 (Fy=50)	14 WF 167 (Fy=50)	14 WF 550 (Fy=50)	14 WF 87 (Fy=50)	14 WF 455 (Fy=50)
Top of Base Pl.	El. 243'-4"	El. 243'-4"	El. 243'-4"	El. 243'-4"	El. 243'-4"	El. 243'-4"	El. 243'-4"
Base Plate	37 x 7 3/4 x 5'-1"	37 x 7 3/4 x 5'-0"	39 x 1 x 5'-5"	33 x 5 1/8 x 2'-11"	33 x 6 x 4'-10"	22 x 2 3/4 x 2'-0"	31 x 5 3/8 x 4'-6"

LICENSED PROFESSIONAL ENGINEER — LESLIE E. ROBERTSON — No. 34360 — UNIVERSITY OF THE STATE OF NEW YORK

* Provide proper splice pls., bolt holes & finished col. top for future columns. Use upper col. one size smaller except as shown.
▲ See detail on 10-JK4-3 and 4.
■ Splice 3" above slab. See note on 10-JK2-2.
● See detail on 10-JK2-30.
⊠ Splice detail see 10-JK2-35A

10-K1-272

WORTHINGTON, SKILLING, HELLE & JACKSON — Civil & Structural Engineers

PROJECT: THE WORLD TRADE CENTER | TITLE: COLUMN SCHEDULE | DATE: 5-15-67

REVISIONS
6-7-68
6-28-68

	K 74-12	K 74-13	K 74-14	K 74-15	K 74-16	K 74-17	K 74-18
El. 332'							
El. 310'							
El. 290'	14 WF 176 (Fy = 50)	14 WF 176 (Fy = 50)	14 WF 237 (Fy = 50)		14 WF 314 (Fy = 50)		14 WF 167 (Fy = 50)
El. 279'-3"	detail 10 10-JK2-41	detail 10 10-JK2-41					
El. 264'	Temp. Bracing	Temp. Bracing	14 WF 500 (Fy = 50)	14 WF 184 (Fy = 50)	14 WF 605 (Fy = 46)	14 WF 87 (Fy = 50)	14 WF 370 (Fy = 50)
El. 253	20 x 12 I, 2 PLs 12 x 5, 1 PL 10 x 3 (Fy = 50)	20 x 12 I, 2 PLs 12 x 5, 1 PL 10 x 3 (Fy = 50)	14 WF 500 (Fy = 50)	14 WF 184 Fy = 50	14 WF 605 (Fy = 46)	14 WF 87 (Fy = 50)	14 WF 370 (Fy = 50)
Top of Base Pl.	El. 243'-4"	El. 243'-4"	El. 243'-4"	El. 243'-4"	El. 243'-4"	El. 243'-4"	El. 243'-4"
Base Plate	50 x 6¼ x 4'-5"	51 x 6¼ x 4'-7"	55 x 6½ x 5'-0"	34 x 3⅛ x 2'-11"	59 x 7 x 5'-5"	22 x 2½ x 2'-0"	46 x 4¾ x 4'-1"

* Provide proper splice pls., bolt holes & finished col. top for future columns. Use upper col. one size smaller except as shown.
▲ See detail on 10-JK4-3 and 4.
■ Splice 3" above slab. See note on 10-JK2-2.
● See detail on 10-JK2-30.

10-K1-274

LICENSED PROFESSIONAL ENGINEER — LESLIE E. ROBERTSON — No. 34360 — UNIVERSITY OF THE STATE OF NEW YORK

WORTHINGTON, SKILLING, HELLE & JACKSON — Civil & Structural Engineers

PROJECT: THE WORLD TRADE CENTER | TITLE: COLUMN SCHEDULE | DATE: 5-15-67

REVISIONS
6-7-68
6-28-68

	K 74-19
El. 332'	
El. 310'	
El. 290'	14 WF 95 (Fy=50)
El. 279'-3"	
El. 264'	14 WF 264 (Fy=50)
El. 253 ▲	14 WF 264 (Fy=50)
Top of Base Pl. (El. 243'-4")	
Base Plate	35 x 35 x 2¾ x 3'-4"

✱ Provide proper splice pls., bolt holes & finished col. top for future columns. Use upper col. one size smaller except as shown.
▲ See detail on 10-JK4-3 and 4.
■ Splice 3" above slab. See note on 10-JK2-2.
● See detail on 10-JK2-30.

10-K1-275

LICENSED PROFESSIONAL ENGINEER — LESLIE E. ROBERTSON — No. 34360 — UNIVERSITY OF THE STATE OF NEW YORK

C

WORTHINGTON, SKILLING, HELLE & JACKSON — Civil & Structural Engineers

PROJECT: THE WORLD TRADE CENTER | TITLE: COLUMN SCHEDULE | DATE: 5-15-67

REVISIONS
6-7-68
6-28-68

	K75-16	K75-17	K75-18	K75-19	K75-20	K75-21	K75-22
El. 332'							
El. 310'							
El. 290'	14 WF 176 (Fy=50)	14 WF 119 (Fy=50)			14 WF 167 (Fy=50)	14 WF 184 (Fy=50)	14 WF 103 (Fy=50)
El. 279'-3"	detail 10 / 10-JK2-41	detail 11 / 10-JK2-41	14 WF 211 (Fy=50)	14 WF 211 (Fy=50)	14 WF 211 (Fy=50)	14 WF 228 (Fy=50)	14 WF 264 (Fy=50)
El. 264'	Temp. Bracing	Temp. Bracing			Temp. Bracing	Temp. Bracing	
El. 253	20 x 127 (Fy=50) 2 PL 12 x 5 1 PL 10 x 3	20 x 127 (Fy=50) 2 PL 12 x 5 1 PL 10 x 3	14 WF 211 (Fy=50)	14 WF 211 (Fy=50)	14 WF 287 (Fy=50)	14 WF 287 (Fy=50)	14 WF 264 (Fy=50)
Top of Base Pl.	El. 243'-4"	El. 243'-4"	El. 243'-4"	El. 243'-4"	El. 243'-4"	El. 243'-4"	El. 243'-4"
Base Plate	49 x 5¼ x 4'-7"	44 x 6 x 3'-10"	39 x 3¾ x 3'-5"	39 x 3¾ x 3'-5"	48 x 5⅝ x 4'-3"	47 x 5⅝ x 4'-3"	39 x 3¾ x 3'-5"

* Provide proper splice pls., bolt holes & finished col. top for future columns. Use upper col. one size smaller except as shown.
▲ See detail on 10-JK4-3 and 4.
■ Splice 3" above slab. See note on 10-JK2-2.
● See detail on 10-JK2-30.

10-K1-276

LICENSED PROFESSIONAL ENGINEER — LESLIE E. ROBERTSON — No. 34360 — UNIVERSITY OF THE STATE OF NEW YORK

C

WORTHINGTON, SKILLING, HELLE & JACKSON — Civil & Structural Engineers

PROJECT: THE WORLD TRADE CENTER | TITLE: COLUMN SCHEDULE | DATE: 12-17-68

REVISIONS

	K75-23	K75-54
El. 332'		
El. 310'		
El. 294'	14 WF 119 (Fy = 50)	14 WF 78 (Fy = 50)
El. 284'		
El. 274'	Temp. bracing 14 WF 167 (Fy = 50)	
El. 264' ▲		
El. 253	14 WF 193 (Fy = 50)	
Top of base Pl	El. 243'-4"	
Base Plate	12 × 1 3/8 × 3'-6"	

✱ Provide proper splice pls., bolt holes & finished col. top for future columns. Use upper col. one size smaller except as shown.
▲ See detail on 10-JK4-3 and 4.
■ Splice 3" above slab. See note on 10-JK2-2.
● See detail on 10-JK2-30.

10-K1-276A

LICENSED PROFESSIONAL ENGINEER — LESLIE E. ROBERTSON — No. 34360 — UNIVERSITY OF THE STATE OF NEW YORK

A

WORTHINGTON, SKILLING, HELLE & JACKSON — Civil & Structural Engineers

PROJECT: THE WORLD TRADE CENTER | TITLE: COLUMN SCHEDULE | DATE: 6-7-68

REVISIONS
6-28-68
9-13-68
10-15-68

	K76-54	K76-55	K76-56	K76-57			
El. 332'							
El. 310'							
El. 290'							
El. 279'-3"							
El. 264'	℄ Girder	℄ Girder	Bott. of girder	Bott. of girder			
El. 253	14 WF 61 (Fy = 42)	14 WF 61 (Fy = 42)	14WF68 (Fy=50)	14WF68 (Fy=50)			
Top of Base ℄	El. 243'-4"	El. 243'-4"	El. 243'-4"	El. 243'-4"			
Base Plate	20 x 1¾ x 2'-0"	20 x 1¾ x 2'-0"	20 x 1¾ x 2'-0"	20 x 1¾ x 2'-0"			

LICENSED PROFESSIONAL ENGINEER — LESLIE E. ROBERTSON — No. 34360 — REGISTERED IN THE STATE OF NEW YORK

✱ Provide proper splice pls., bolt holes & finished col. top for future columns. Use upper col. one size smaller except as shown.
▲ See detail on 10-JK4-3 and 4.
■ Splice 3" above slab. See note on 10-JK2-2.
● See detail on 10-JK2-30.

10-K1-278

WORTHINGTON, SKILLING, HELLE & JACKSON — Civil & Structural Engineers

PROJECT: THE WORLD TRADE CENTER | TITLE: COLUMN SCHEDULE | DATE: 1-17-69

REVISIONS
4-18-69

	K92-3	K92-4	K92-5
El. 332'			
El. 310'			
El. 300'			
El. 284'	Det. 1 / 12-JK2-99	Det. 3 / 12-JK2-99	Det. 2 / 12-JK2-99
El. 270'	14WF95 (Fy=50)	14WF61 (hanger) (Fy=42)	14WF87 (Fy=50)
El. 264'		Det. 10 / 12-JK1-75A	
El. 253	14WF127 (Fy=50)		14WF127 (Fy=50)
Top of base Pl	El. 249'-0"		El. 249'-0"
Base Plate	34 × 3¼ × 2'-10"		34 × 3¼ × 2'-10"

LICENSED PROFESSIONAL ENGINEER — LESLIE E. ROBERTSON — No. 34360 — REGISTERED IN THE STATE OF NEW YORK

DRAWN S.C.
REVIEWED E.L.

* Provide proper splice pls., bolt holes & finished col. top for future columns. Use upper col. one size smaller except as shown.
▲ See detail on 10-JK4-3 and 4.
■ Splice 3" above slab. See note on 10-JK2-2.
● See detail on 10-JK2-30.

10-K1-279

A

WORTHINGTON, SKILLING, HELLE & JACKSON — Civil & Structural Engineers

PROJECT: THE WORLD TRADE CENTER | TITLE: COLUMN SCHEDULE - NEW COLUMNS HOTEL AREA | DATE: 12-23-71

REVISIONS: 11-27-72

	H-P1	H-P2	H-P3	H-P4	H-P5	H-P6	H-P7
3'-0" El. 332'	See Dwg. Book 13	See D.B. 13	See D.B. 13	See D.B. 13	See D.B. 13	See D.B. 13	
El. 310'		3'-0" *					
3'-0" El. 294'	*		*	*	*	*	
El. 284'	14WF426 Fy36	14WF426 Fy36	14WF193 Fy36	14WF193 Fy36	14WF455 Fy36	14WF455 Fy36	2" 10-JK5-2 A; 14WF264 Fy36 10-JK5-2 A
3'-0" El. 274'	③	③	③	③	③	③	③ 10-JK5-2 A
El. 264'							10-JK5-2 A
El. 253	14WF500 Fy36	14WF500 Fy36	14WF219 Fy36	14WF219 Fy36	14WF500 Fy36	14WF500 Fy36	14WF264 Fy36
Top of base PL at El. 241'							
Base Plate	60"x6¾"x5'-6" ① Fy36	60"x6¾"x5'-6" ① Fy36	41"x4⅛"x3'-8" ① Fy36	41"x4⅛"x3'-8" ① Fy36	60"x9½"x5'-6" ①② Fy36	60"x6¾"x5'-6" ① Fy36	45"x4⅝"x4'-0" ① Fy36

Shear studs see 10-JK5-2

* Provide proper splice pls., bolt holes & finished col. top for future columns. See 10-JK2-4.

① See 10-JK3-2

② See Det. B 8-JK5-9.5

③ See 10-JK2-4

LICENSED PROFESSIONAL ENGINEER — LESLIE E. ROBERTSON — No. 34360 — UNIVERSITY OF THE STATE OF NEW YORK

DESIGNED: K. CHIANG

DRAWN: A. FRANQUI

REVIEWED: W. Brewer

10-K1-299

WORTHINGTON, SKILLING, HELLE & JACKSON — Civil & Structural Engineers

PROJECT: THE WORLD TRADE CENTER | TITLE: TYPICAL COLUMN DETAILS | DATE: 5-15-67

REVISIONS
10-20-67
11-8-67
12-13-67
1-5-68
2-16-68
12-3-68
3-1-69

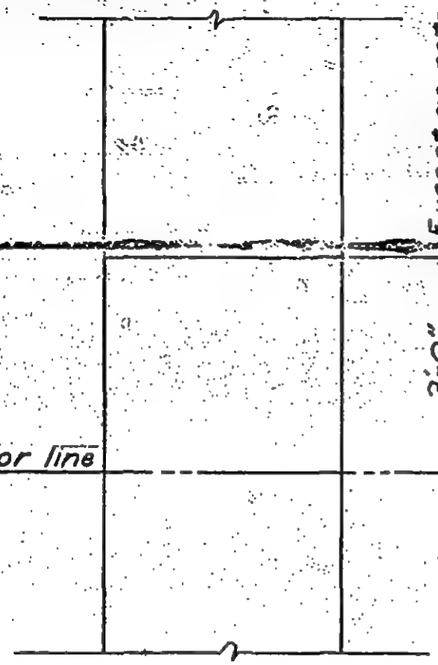

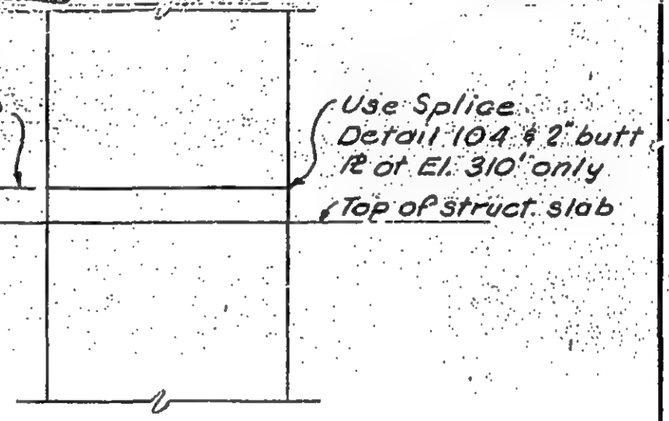

FOR COLUMNS :- J11-1 thru 9
J12-52 & 53
K29-4 (hold)
K31-3
K31-5 thru 10
K35-10
K37-10
K41-10
K43-9
K44-1
K45-8
K46-1
K47-8 & 52
K48-1
K50-1
K51-7
K52-1
K53-7
K54-1
K55-6
K51-2, 4, 5, 6

10-JK2-2

TYPICAL SPLICE LOCATION

LICENSED PROFESSIONAL ENGINEER — LESLIE E. ROBERTSON — No. 34360 — UNIVERSITY OF THE STATE OF NEW YORK

DRAWN: S.C.
REVIEWED: E.L.

WORTHINGTON, SKILLING HELLE & JACKSON — Civil & Structural Engineers

PROJECT: THE WORLD TRADE CENTER | TITLE: TYPICAL COLUMN DETAILS | DATE: 5-15-67

REVISIONS

10-20-67

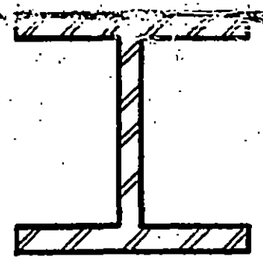

TYPE 100

All splice & material to be A36.
Welding electrodes to be E70 series electrodes.

Bolts to be A325 Friction type connections.

LICENSED PROFESSIONAL ENGINEER
LESLIE E. ROBERTSON
No. 34360
UNIVERSITY OF THE STATE OF NEW YORK

10-JK2-3

WORTHINGTON, SKILLING, HELLE & JACKSON — Civil & Structural Engineers

PROJECT: THE WORLD TRADE CENTER | TITLE: TYPICAL COLUMN DETAILS | DATE: 5-15-67

REVISIONS
5-26-67
10-20-67
11-8-67
3-17-69
12-23-71

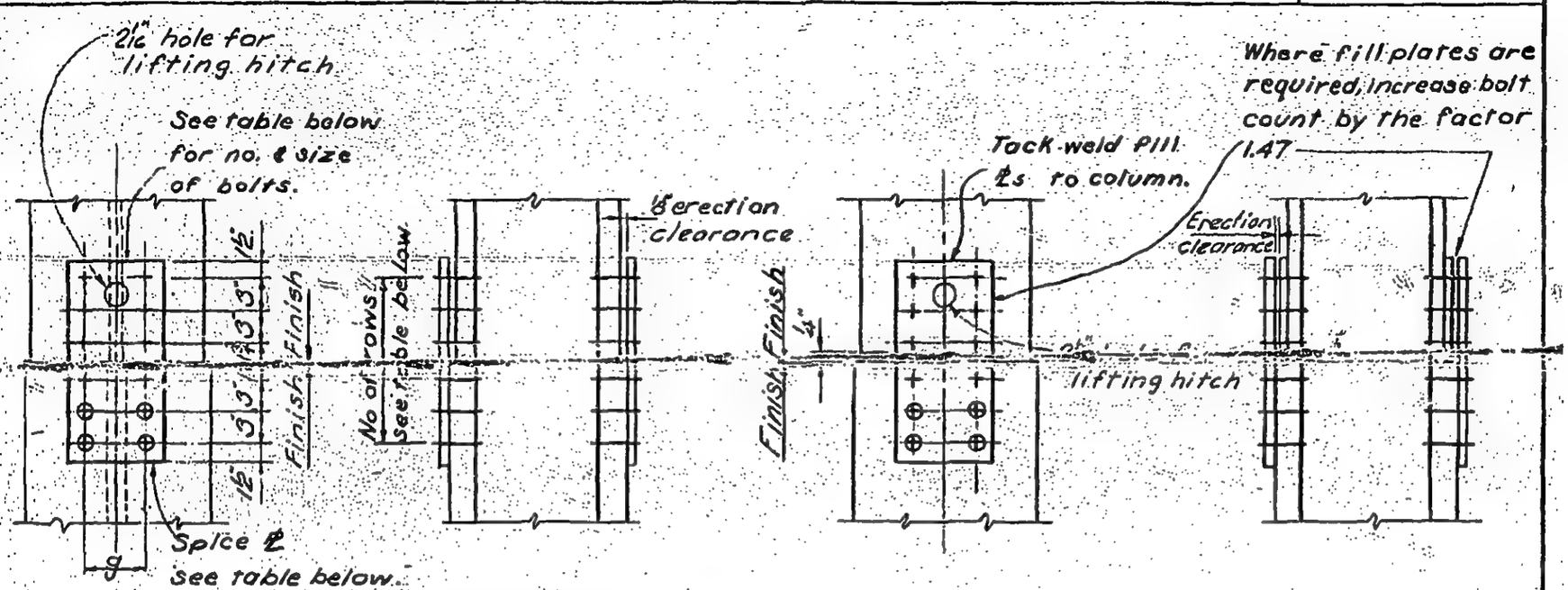

UPPER COLUMN SIZE		No. & Size of BOLTS	No. of ROWS	SPLICE ℄ SIZE	g
10 WF 112	thru 33	8 - ¾" Ø	4	8 x ⅜	5½
12 WF 190	thru 161 incl.	12 - ¾" Ø	6	9 x ½	5½
133	53	8 - ¾" Ø	4	9 x ⅜	5½
50	40	8 - ¾" Ø	4	8 x ⅜	5½
14 WF 455	Thru 370 incl.	20 - ⅞" Ø	10	15 x ⅝	11½
342	287	16 - ⅞" Ø	8	15 x ⅝	11½
264	202	12 - ⅞" Ø	6	15 x ½	11½
193	142	12 - ¾" Ø	6	15 x ½	11½
136	87	12 - ¾" Ø	6	11 x ⅜	5½
84	61	8 - ¾" Ø	4	9 x ⅜	5½
53	43	8 - ¾" Ø	4	8 x ⅜	5½

LICENSED PROFESSIONAL ENGINEER
LESLIE E. ROBERTSON
No. 34360
UNIVERSITY OF THE STATE OF NEW YORK

DRAWN S.C.
REVISED E.L.

SPLICE DETAIL 101

Splice Detail-102 may be used at contractor's option.

10-JK2-4

SKILLING - HELLE - CHRISTIANSEN - ROBERTSON Structural & Civil Engineers

PROJECT THE WORLD TRADE CENTER | TITLE TYPICAL COLUMN DETAILS | DATE 10-20-67

REVISIONS

11-8-67

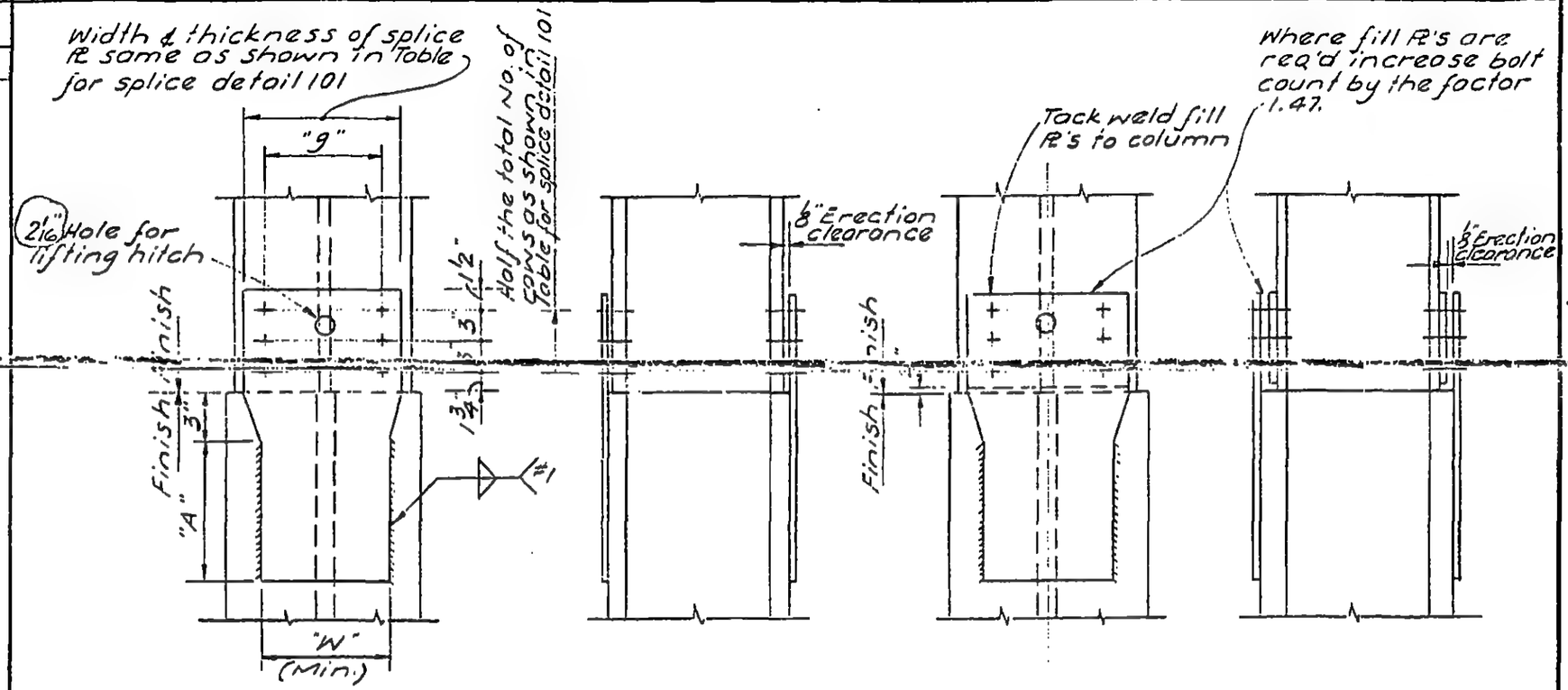

UPPER COLUMN SIZE			Weld #1	"A"	"W"
10WF33	THRU	66	1/4	6"	6"
" 72	"	112	5/16	8	6
12WF40	THRU	58	1/4	10	6
" 65	"	133	5/16	12	8
" 161	"	190	7/16	12	9
14WF43	THRU	53	1/4	8	8
" 61	"	84	1/4	12	8
" 87	"	95	1/4	15	11
" 111	"	136	3/8	15	11
" 142	"	202	3/8	15	12
" 211	"	264	7/16	15	12
" 287	"	342	1/2	15	12
" 370	"	426	9/16	15	12

LICENSED PROFESSIONAL ENGINEER LESLIE E. ROBERTSON No. 34360 UNIVERSITY OF THE STATE OF NEW YORK

SPLICE DETAIL 102

10-JK2-5

WORTHINGTON, SKILLING, HELLE & JACKSON — Civil & Structural Engineers

PROJECT: THE WORLD TRADE CENTER | TITLE: TYPICAL COLUMN DETAILS | DATE: 5-15-67

REVISIONS
5-26-67
11-8-67
3-13-68
6-17-68

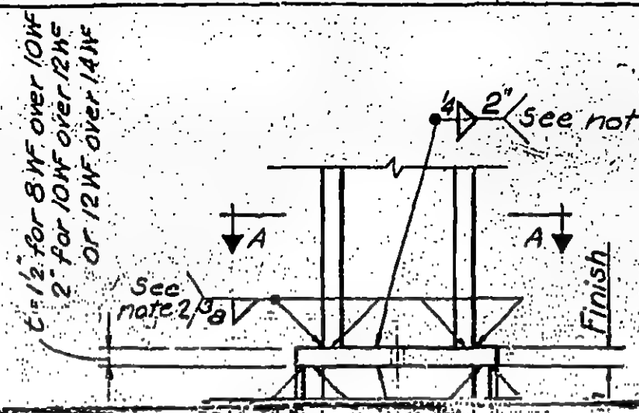

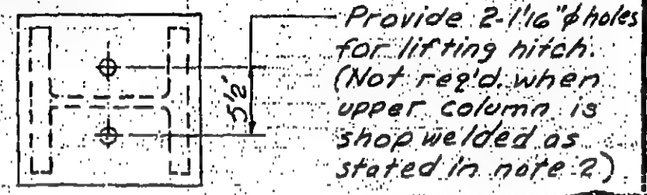

Section A-A

NOTES:

1. Use where upper column is nominally 2" or more smaller than lower column.
2. Shop weld shall be used for column splices at El. 264' as shown on 10-JK4-3 and 4.
3. Full length weld each side of web for columns J3-3, J3-10, J7-2 and J11-1 Thru J11-6 (above El. 310').
4. Butt Pls. to be 22½" × 2" × 1'-10½" For cols. J3-3, J3-10, J7-2, J11-1 and J11-6 (above El. 310').

LESLIE E. ROBERTSON — LICENSED PROFESSIONAL ENGINEER — No. 34360 — UNIVERSITY OF THE STATE OF NEW YORK

SPLICE DETAIL 104

10-JK2-7

WORTHINGTON, SKILLING, HELLE & JACKSON Civil & Structural Engineers

PROJECT THE WORLD TRADE CENTER | TITLE TYPICAL COLUMN DETAILS | DATE 5-15-67

REVISIONS

10-20-67

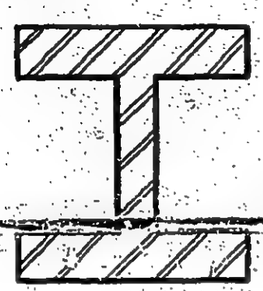

TYPE 110

All splice & material to be A36.
Welding electrodes to be E70 series electrodes.

Bolts to be A325 Friction type connections.

LICENSED PROFESSIONAL ENGINEER
LESLIE E. ROBERTSON
No. 34360
UNIVERSITY OF THE STATE OF NEW YORK

10-JK2-8

1040-42

WORTHINGTON, SKILLING, HELLE & JACKSON — Civil & Structural Engineers

PROJECT: THE WORLD TRADE CENTER | TITLE: TYPICAL COLUMN DETAILS | DATE: 5-15-67

REVISIONS
5-26-67
10-20-67
11-8-67

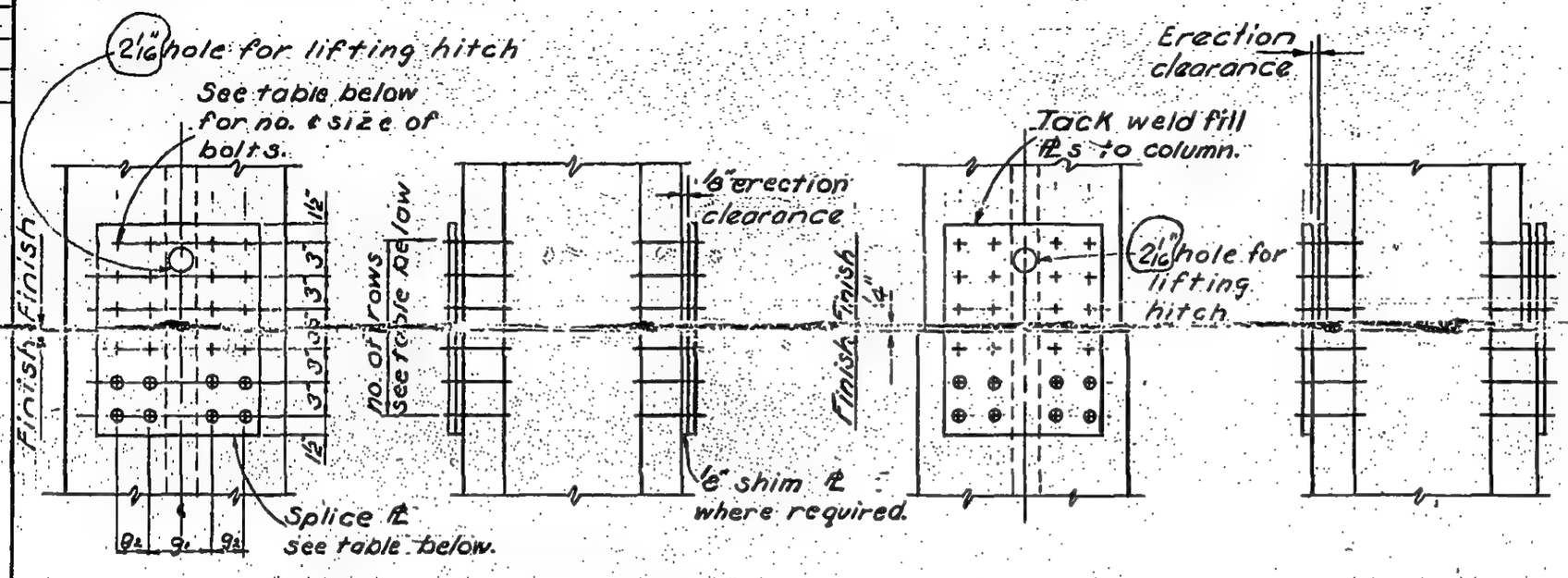

UPPER COL. SIZE	No. & SIZE OF BOLTS	No OF ROWS	SPLICE PL SIZE	g	g_2
14WF455, 14WF500	20-1"Ø	6	17 x 7/8	5½	3
14WF550, 14WF605	24-1"Ø	6	17 x 7/8	5½	3
14WF665, 14WF730	28-1"Ø	8	17 x 1	7	3

LICENSED PROFESSIONAL ENGINEER — LESLIE E. ROBERTSON — No. 34360 — UNIVERSITY OF THE STATE OF NEW YORK

SPLICE DETAIL 111

Splice Detail-112 may be used at contractor's option.

10-JK2-9

1040-L,3

SKILLING - HELLE - CHRISTIANSEN - ROBERTSON Structural & Civil Engineers

PROJECT THE WORLD TRADE CENTER | TITLE TYPICAL COLUMN SPLICE DETAIL | DATE 10-20-67

REVISIONS

11-8-67

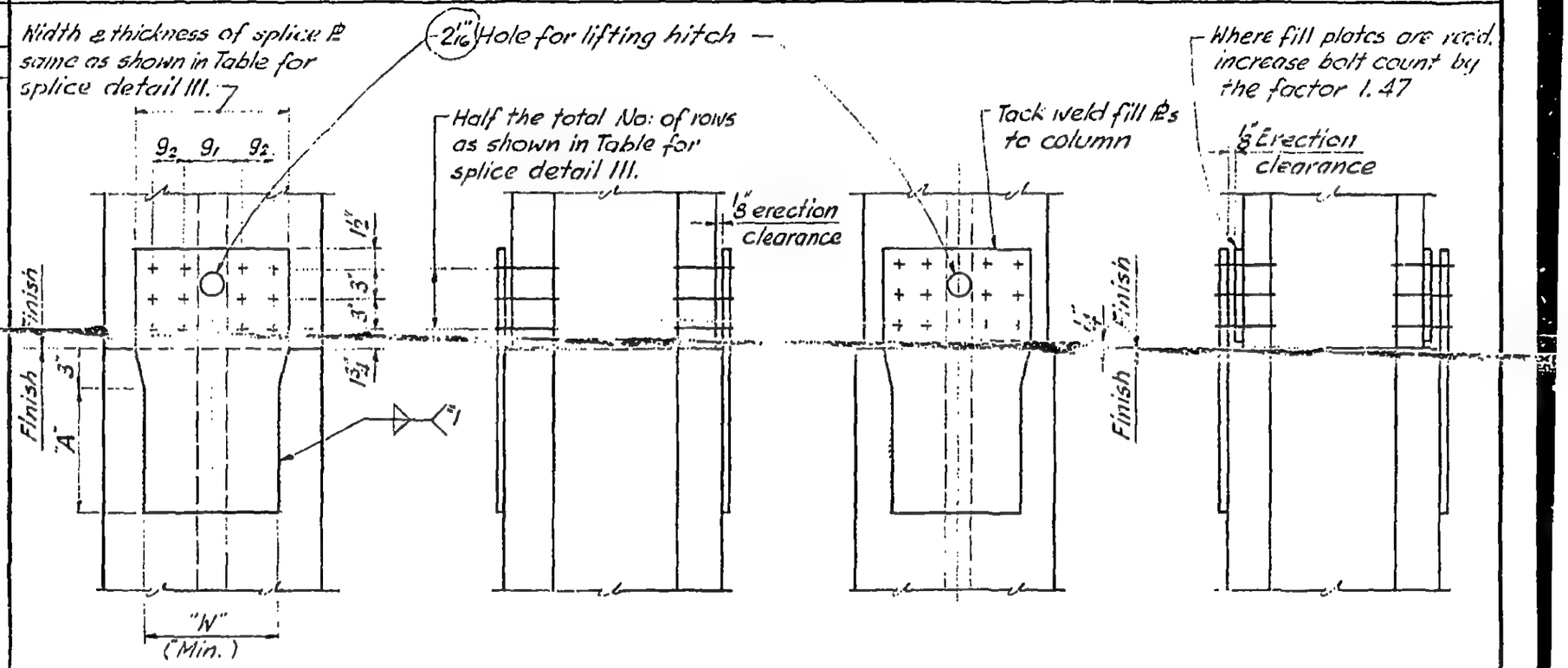

UPPER COL. SIZE	WELD "2	"A"	"W"
14 WF 455 thru 14 WF 500	9/16	18	14
14 WF 550 thru 14 WF 605	5/8	18	14
14 WF 665 thru 14 WF 730	5/8	18	15

LICENSED PROFESSIONAL ENGINEER LESLIE E. ROBERTSON No. 34360 UNIVERSITY OF THE STATE OF NEW YORK

SPLICE DETAIL III2

10-JK2-10

WORTHINGTON, SKILLING, HELLE & JACKSON Civil & Structural Engineers

PROJECT THE WORLD TRADE CENTER | TITLE TYPICAL COLUMN DETAILS | DATE 5-15-67

REVISIONS

10-20-67

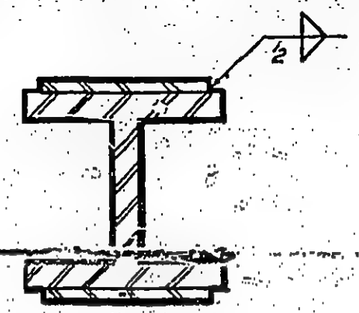

TYPE 200

All splice ℄ material to be A36.
Welding electrodes to be E70 series electrodes

Bolts to be A325, Friction type connections.

10-JK2-12

SKILLING - HELLE - CHRISTIANSEN - ROBERTSON Structural & Civil Engineers

PROJECT THE WORLD TRADE CENTER | TITLE TYPICAL COLUMN DETAILS | DATE 5-15-67

REVISIONS

3-13-68

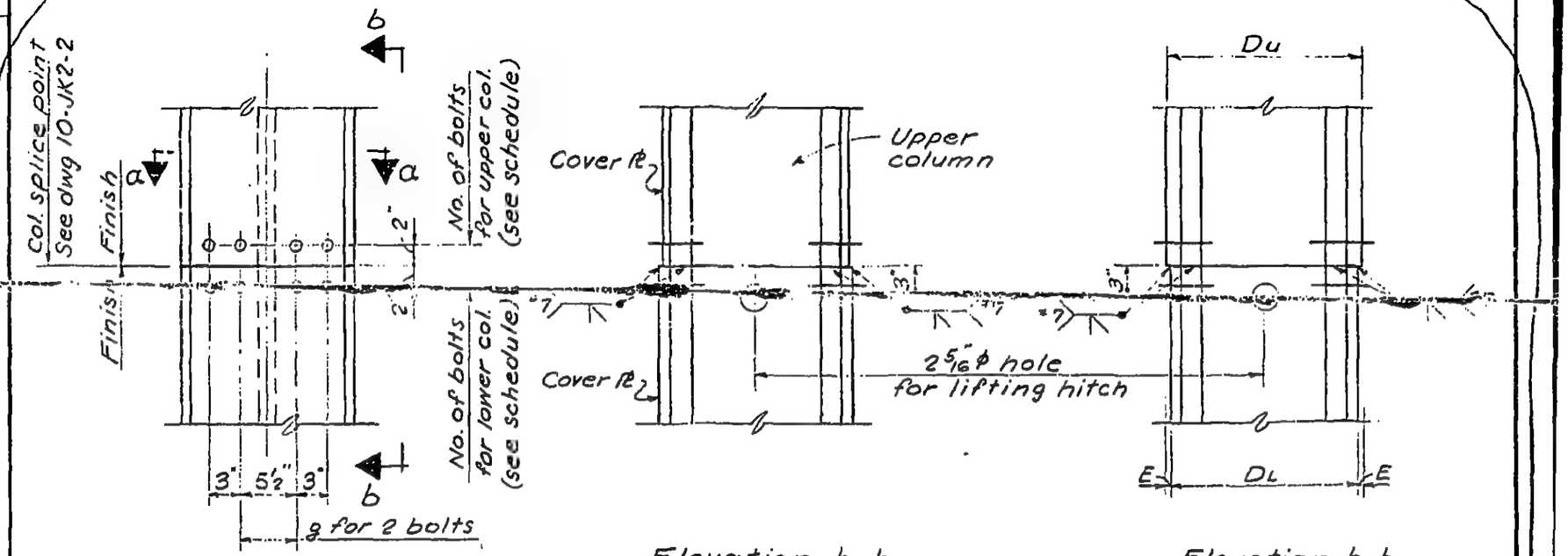

Elevation b-b

Elevation b-b where Du > Dl

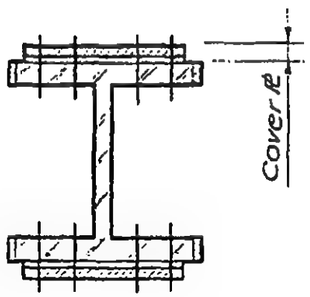

Section a-a

COLUMN SECTION (14 WF 320)		
COVER Pl THICK.	*WELD #7	No. & SIZE OF BOLTS
1" thru 1¼"	1" P.P.	2 - ¾" ϕ
1⅜" thru 1¾"	1 1/16"	2 - ¾" ϕ
1⅞" thru 2½"	1⅛"	4 - ¾" ϕ
2⅝" thru 3⅛"	1 3/16"	4 - ¾" ϕ
3¼" thru 3⅝"	1¼"	4 - ¾" ϕ

NOTES:

1. All bolts shown to be A325 H.S. friction type (shop bolted).
2. * size of weld #7 is governed by cover Pl thickness of upper col. Where Du > Dl, add E to depth of weld #7.

LICENSED PROFESSIONAL ENGINEER LESLIE E. ROBERTSON No. 34360 UNIVERSITY OF THE STATE OF NEW YORK

SPLICE DETAIL 201

10-JK2-13

SKILLING - HELLE - CHRISTIANSEN - ROBERTSON Structural & Civil Engineers

PROJECT THE WORLD TRADE CENTER | TITLE TYPICAL COLUMN DETAILS | DATE 5-15-67

REVISIONS
10-20-67
3-13-68

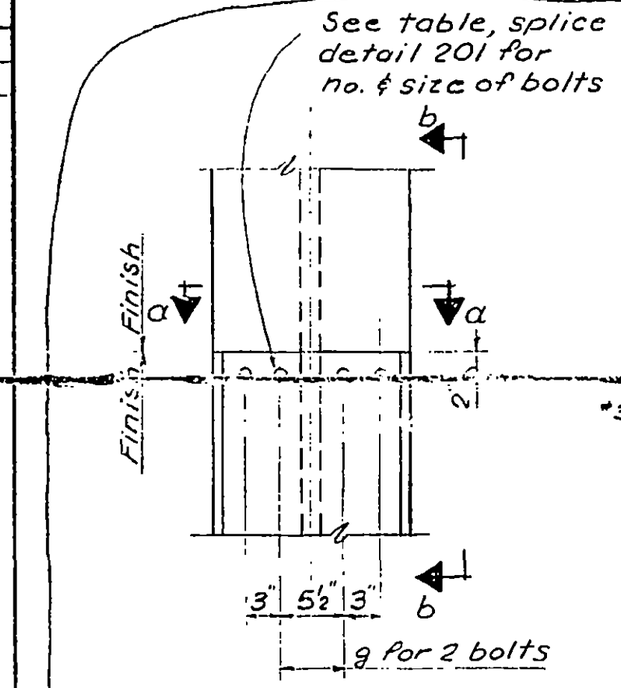

Elevation b-b

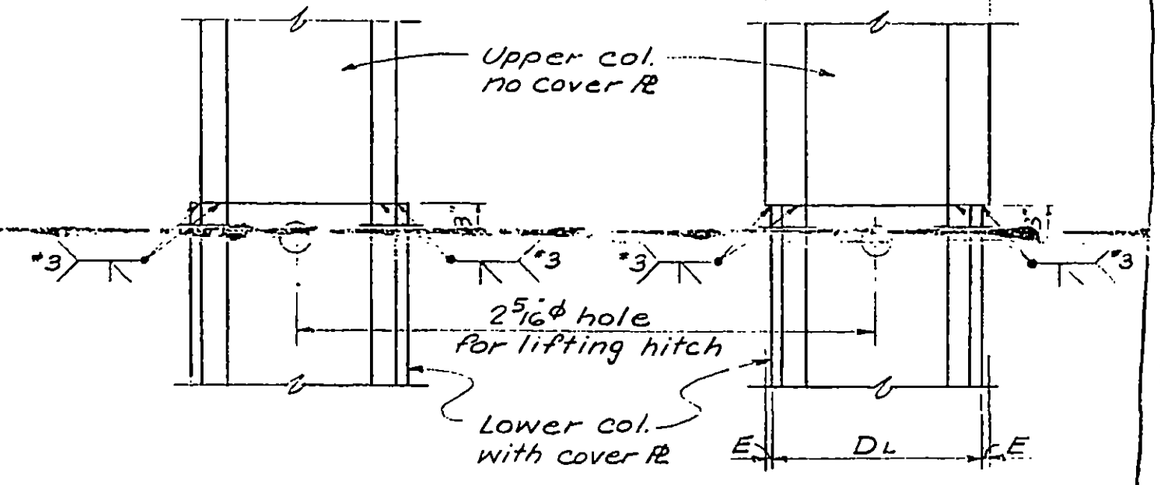

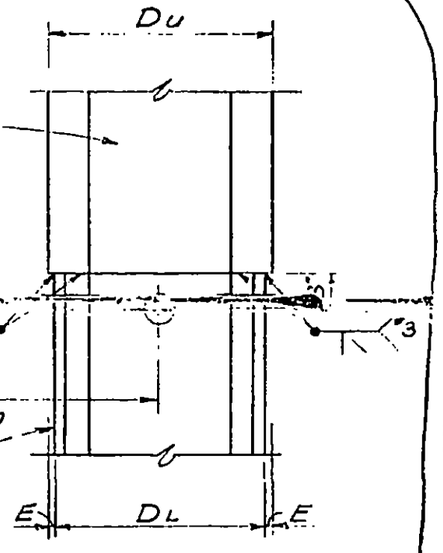

Elevation b-b
where Du > DL

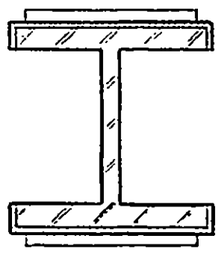

Section a-a

FLANGE THICKNESS OF UPPER COL.	* WELD #3
11/16" & less	C.P.
3/4" – 15/16"	5/8" P.P.
1" – 1 1/4"	11/16"
1 5/16" – 1 9/16"	3/4"
1 5/8" – 2 1/16"	13/16"
2 1/8" – 2 9/16"	7/8"
2 5/8" – 3 1/16"	15/16"
3 1/8" – 3 7/16"	1"
3 1/2" – 4"	1 1/16"
4 1/16" – 4 5/8"	1 1/8"

NOTE:
1. * Where Du > DL, add E to depth of weld #3

LICENSED PROFESSIONAL ENGINEER
LESLIE E. ROBERTSON
No. 34360
UNIVERSITY OF THE STATE OF NEW YORK

SPLICE DETAIL 202

10-JK2-14

SKILLING - HELLE - CHRISTIANSEN - ROBERTSON Structural & Civil Engineers

PROJECT THE WORLD TRADE CENTER | TITLE TYPICAL COLUMN DETAIL | DATE 3-13-68

REVISIONS

Top of column or column assembly where no splice PL is used.

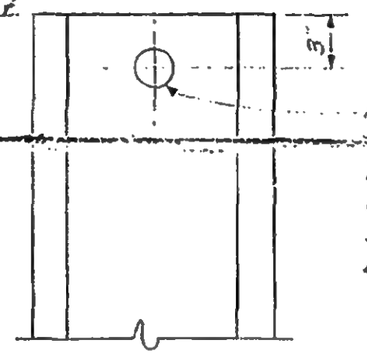

Provide 2 5/16" ϕ hole thru web for lifting hitch.

Typical at top of all columns or column assemblies, unless shown otherwise in Detail Drawings.

LICENSED PROFESSIONAL ENGINEER
LESLIE E. ROBERTSON
No. 34360
IN THE STATE OF NEW YORK

10-JK2-15

SKILLING - HELLE - CHRISTIANSEN - ROBERTSON Structural & Civil Engineers

PROJECT THE WORLD TRADE CENTER | TITLE TYPICAL DETAIL OF BUILT-UP COLUMNS | DATE 6-7-68

REVISIONS

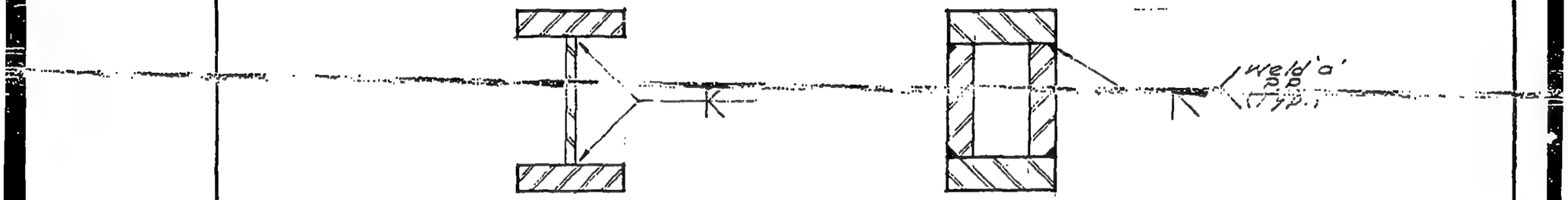

NOTE:
Size of weld 'a' not less than $D = \sqrt{\frac{T}{8}} + \frac{1}{4}$ (min. 1")
Where T = thickness of thinner PL at the joint.

LICENSED PROFESSIONAL ENGINEER
LESLIE E. ROBERTSON
No. 34360
UNIVERSITY OF THE STATE OF NEW YORK

10-JK2-16

SKILLING - HELLE - CHRISTIANSEN - ROBERTSON Structural & Civil Engineers

PROJECT THE WORLD TRADE CENTER | TITLE COLUMN SPLICE DETAIL | DATE 6-17-68

REVISIONS

11-5-68

3-17-69

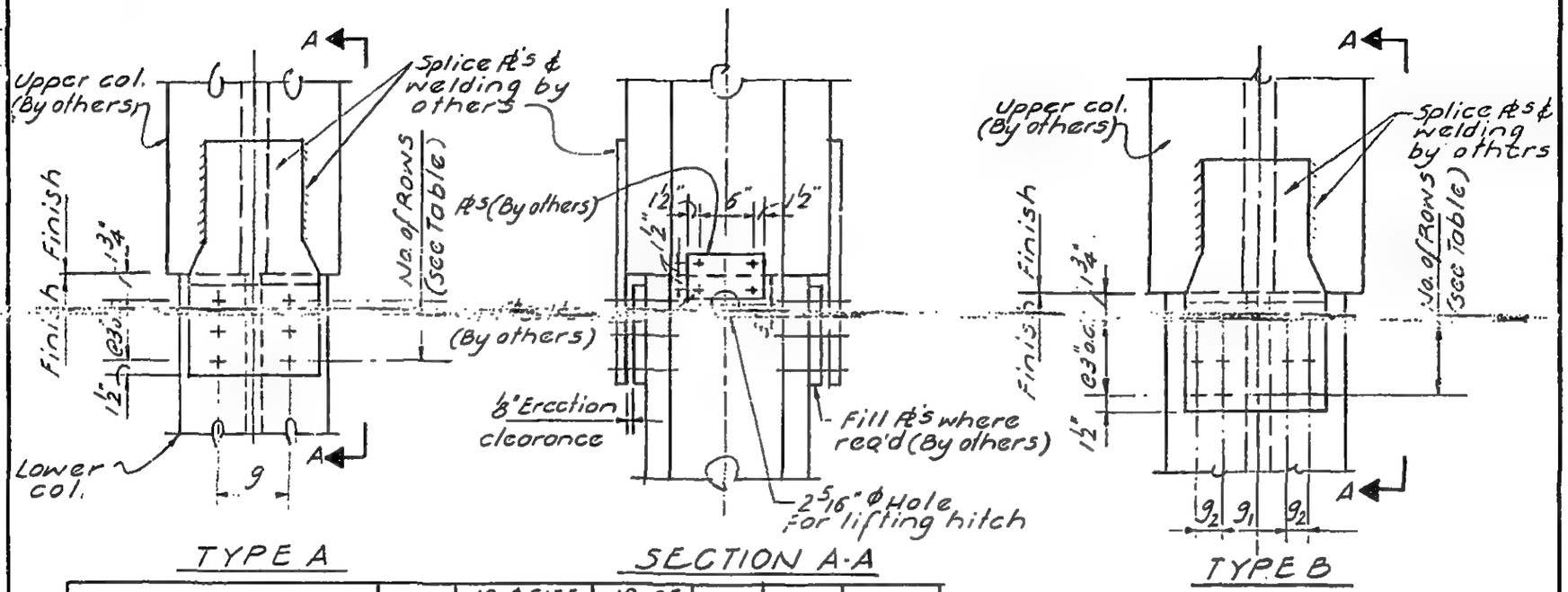

TYPE A SECTION A-A TYPE B

LOWER COLUMN SIZE	TYPE	NO. & SIZE OF BOLTS	NO. OF ROWS	g	g_1	g_2
14WF 61 THRU 84 INCL.	A	6-¾"Φ	3	5½"		
" 87 " 136 "	A	10-¾"Φ	5	5½"		
" 142 " 193 "	A	10-¾"Φ	5	11½"		
" 202 " 264 "	A	10-⅞"Φ	5	11½"		
" 287 " 342 "	A	12-⅞"Φ	6	11½"		
" 370 " 426 "	A	16-⅞"Φ	8	11½"		
" 455 & 500	B	16-1"Φ	4		5½"	3"
" 550 & 605	B	18-1"Φ	5		5½"	3"

Notes:
1. All bolts shown not in this contract.

LICENSED PROFESSIONAL ENGINEER LESLIE E. ROBERTSON No. 34260 UNIVERSITY OF THE NEW YORK

DRAWN S.C.

REVIEWED E.L.

10-JK2-17

SKILLING - HELLE - CHRISTIANSEN - ROBERTSON Structural & Civil Engineers

PROJECT THE WORLD TRADE CENTER | TITLE TYP. DET. OF TEMP. COL. CAP FOR CONST. CRANE SUP'T. | DATE 10-20-67

REVISIONS

11-8-67
1-5-68
3-13-68
6-11-68
6-28-68
7-19-68
10-15-68

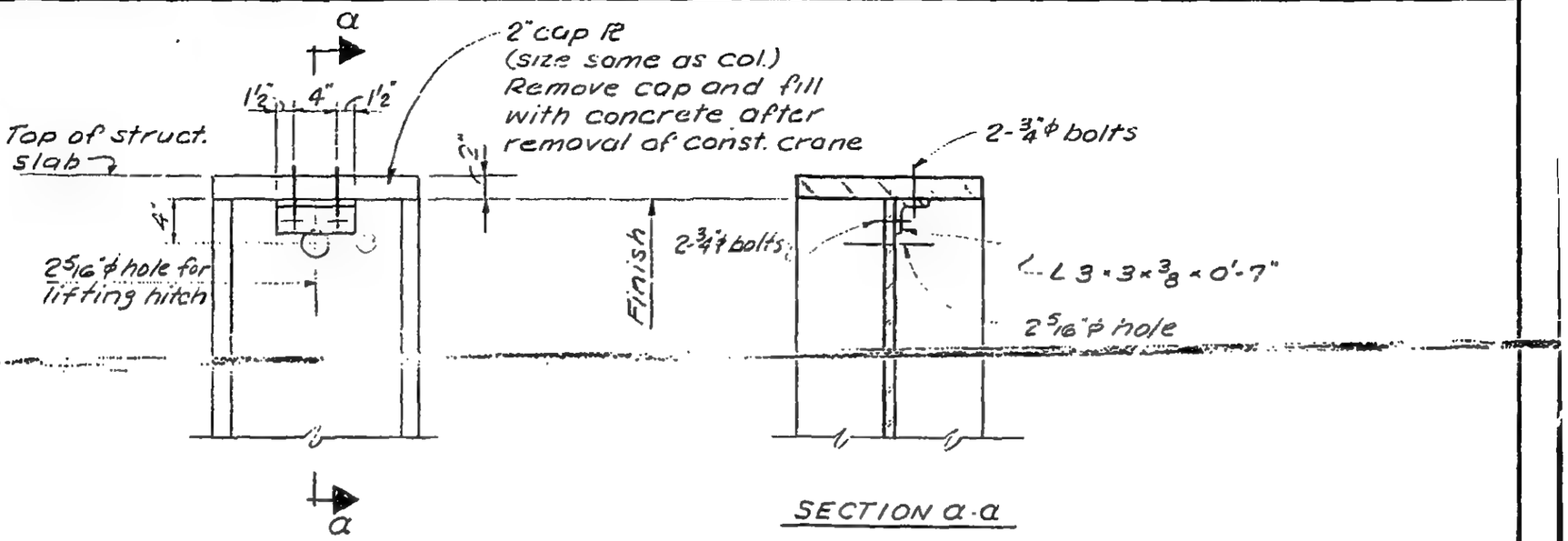

SECTION a-a

COLUMN No.	TOP ELEVATION OF CAP PL
J13-1	EL. 308'-10"
J14-5	308'-6½"
J15-4	308'-6½"
J17-4	308'-2"
J19-4	308'-2"
J21-3	308'-0"
J23-3	307'-10"
J25-3	307'-0"
K27-2	305'-9"
K29-1	305'-6"
K29-2	306'-3"
K29-3	308'-0"
K31-1	305'-6"
K31-2	306'-0"

COLUMN No.	TOP ELEVATION OF CAP PL
K-31-11	El. 309'-9"
J11-9	El. 310'-0"

LICENSED PROFESSIONAL ENGINEER
LESLIE E. ROBERTSON
No. 34360
UNIVERSITY OF THE STATE OF NEW YORK

10-JK2-30

SKILLING - HELLE - CHRISTIANSEN - ROBERTSON Structural & Civil Engineers

PROJECT THE WORLD TRADE CENTER | TITLE TYP. DET. OF COLUMN SITTING ON TOP OF GIRDER | DATE 10-20-67

REVISIONS

11-8-67

1-5-68

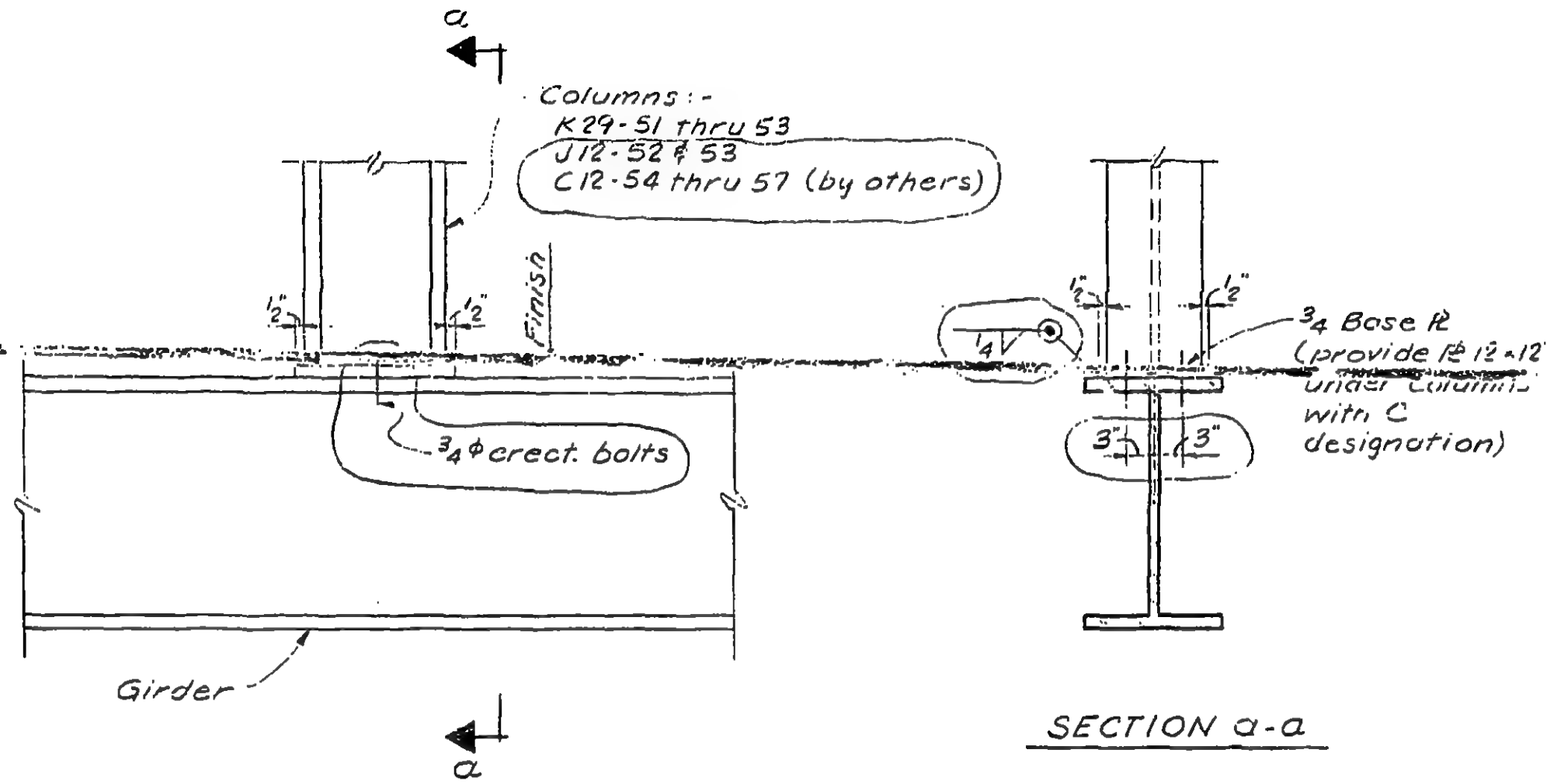

SECTION a-a

NOTE:
Connection between Pl & column similar to Splice Detail 104 (shop weld may be used)

LICENSED PROFESSIONAL ENGINEER
LESLIE E. ROBERTSON
No. 34360
UNIVERSITY OF THE STATE OF NEW YORK

10-JK2-31

SKILLING, HELLE, CHRISTIANSEN, ROBERTSON — Structural & Civil Engineers

PROJECT THE WORLD TRADE CENTER | TITLE DETAIL OF COLUMN SITTING ON TOP OF GIRDER | DATE 11-5-68

REVISIONS

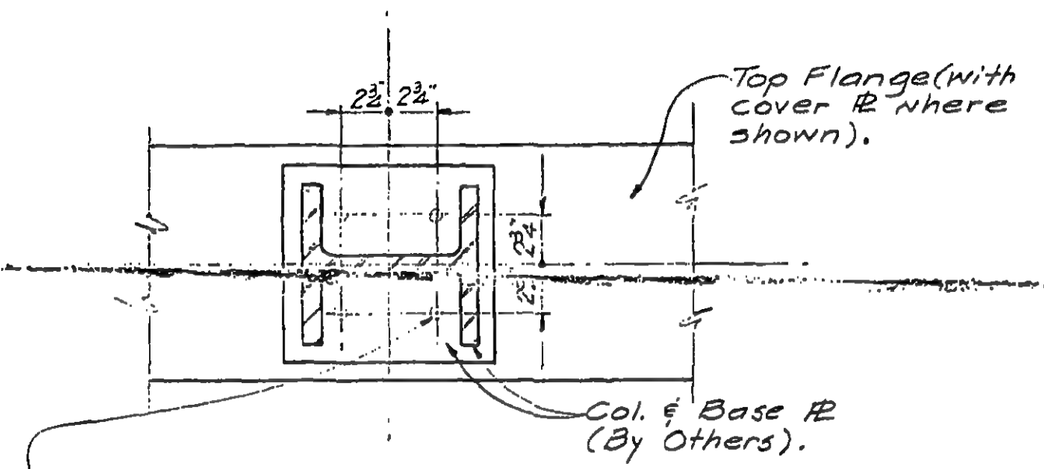

LICENSED PROFESSIONAL ENGINEER — LESLIE E. ROBERTSON — No. 34350 — THE STATE OF NEW YORK

DRAWN

REVIEWED

10-JK2-31A

SKILLING, HELLE, CHRISTIANSEN, ROBERTSON — Structural & Civil Engineers

PROJECT THE WORLD TRADE CENTER | TITLE DETAIL OF COLUMN SITTING ON TOP OF GIRDER | DATE 2-4-69

REVISIONS

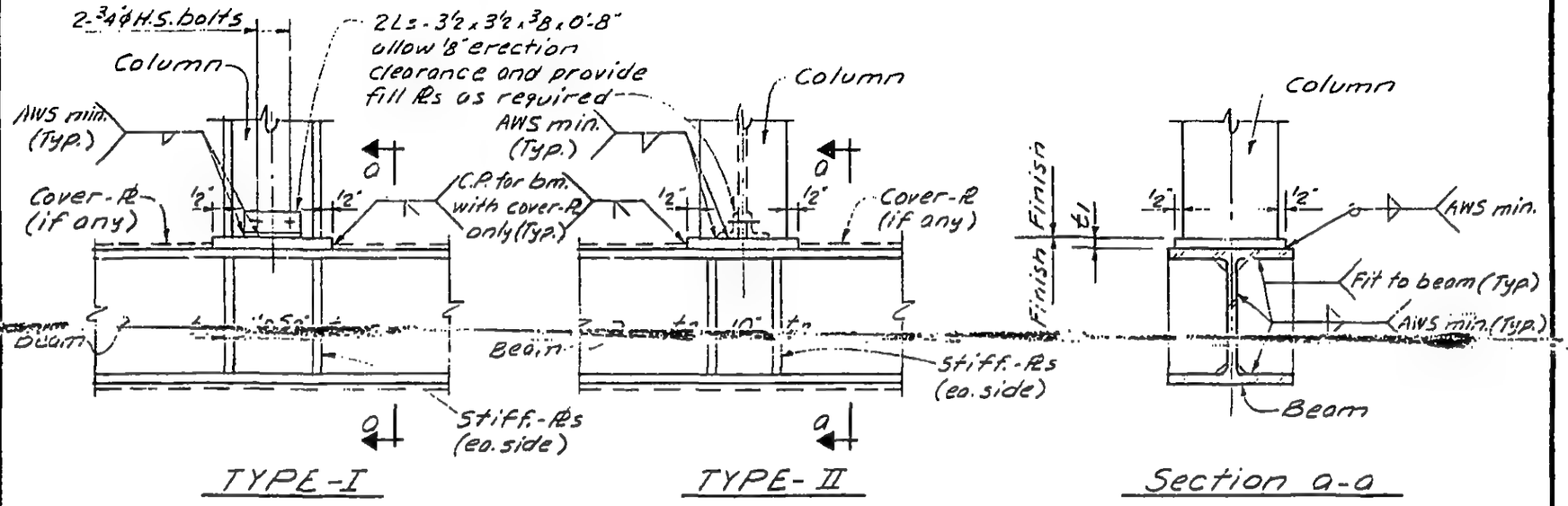

Notes:
1. All bolts to be A-325 friction type.
2. All welds to be E70xx.

DETAIL NO.	TYPE	BEARING Pl		STIFF. Pls		DETAIL NO.	TYPE	BEARING Pl		STIFF. Pls	
		t_1	Fy	t_2	Fy			t_1	Fy	t_2	Fy
1	I	1"	36	¾"	42						

LICENSED PROFESSIONAL ENGINEER
LESLIE E. ROBERTSON
No. 34360
UNIVERSITY OF THE STATE OF NEW YORK

DESIGNED

DRAWN A.L.F.

REVIEWED E.L.

10-JK2-31B

SKILLING - HELLE - CHRISTIANSEN - ROBERTSON · Structural & Civil Engineers

PROJECT THE WORLD TRADE CENTER | TITLE DET. OF COLUMN CAP OVER COL. K31-4, K35-3, K35-52A, K37-3 | DATE 11-24-67

REVISIONS
11-5-68
4-4-69

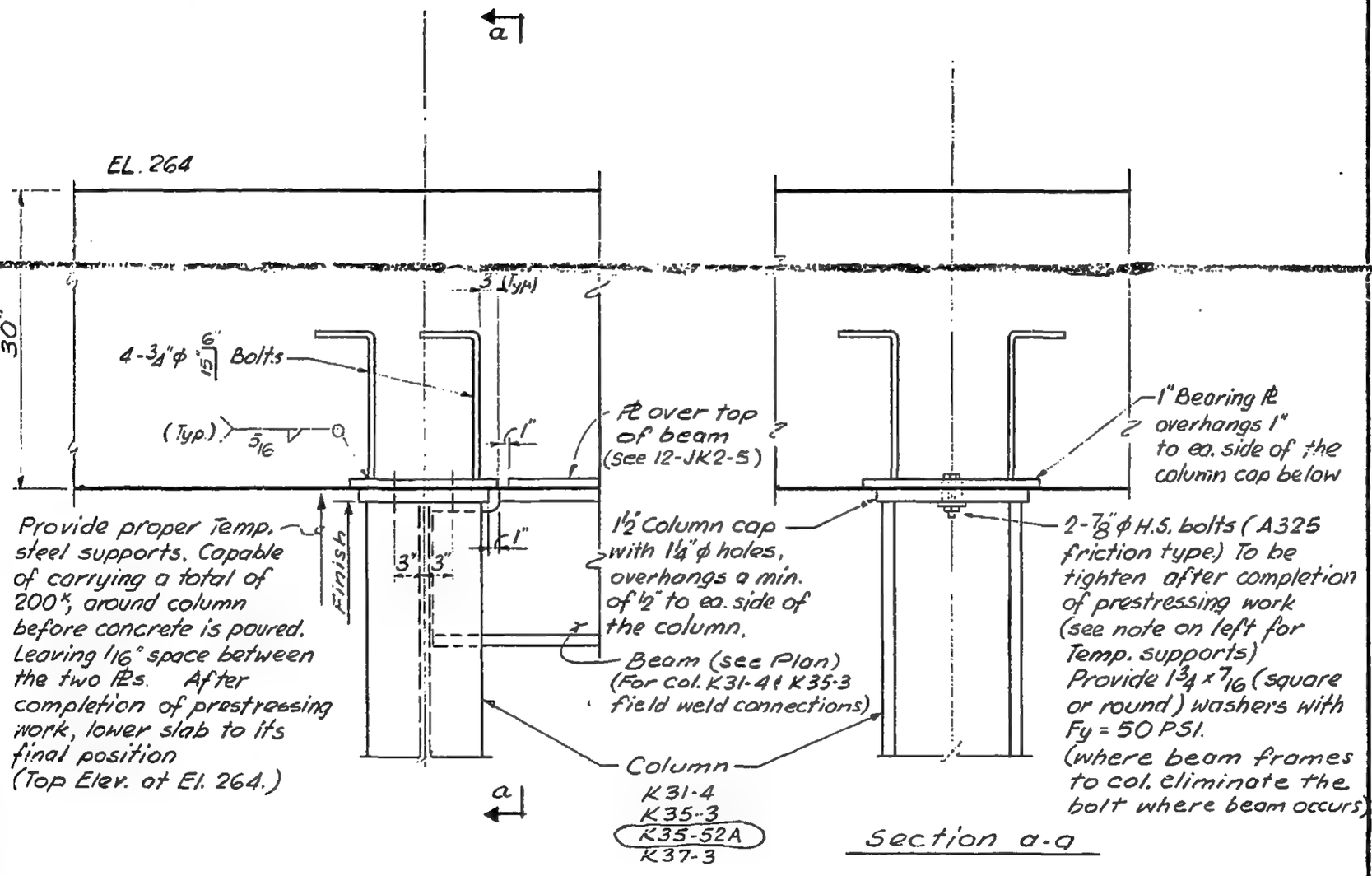

Section a-a

LICENSED PROFESSIONAL ENGINEER
LESLIE E. ROBERTSON
No. 34360
UNIVERSITY OF THE STATE OF NEW YORK

DRAWN
S.C.
REVIEWED
E.L.

10-JK2-32

SKILLING - HELLE - CHRISTIANSEN - ROBERTSON Structural & Civil Engineers

PROJECT THE WORLD TRADE CENTER | TITLE HANGER DETAIL | DATE 1-5-68

REVISIONS

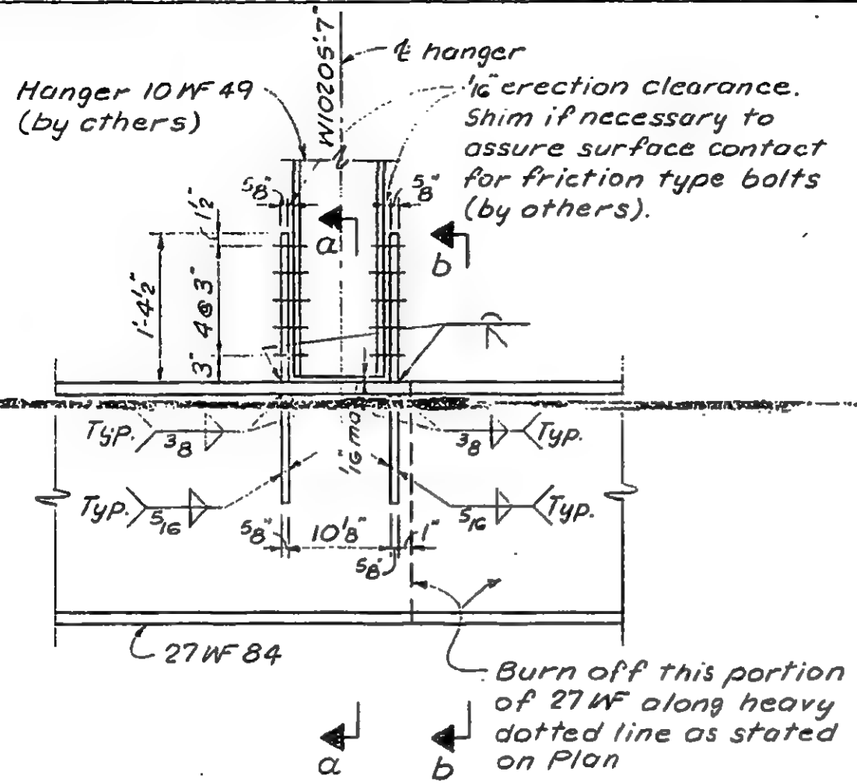

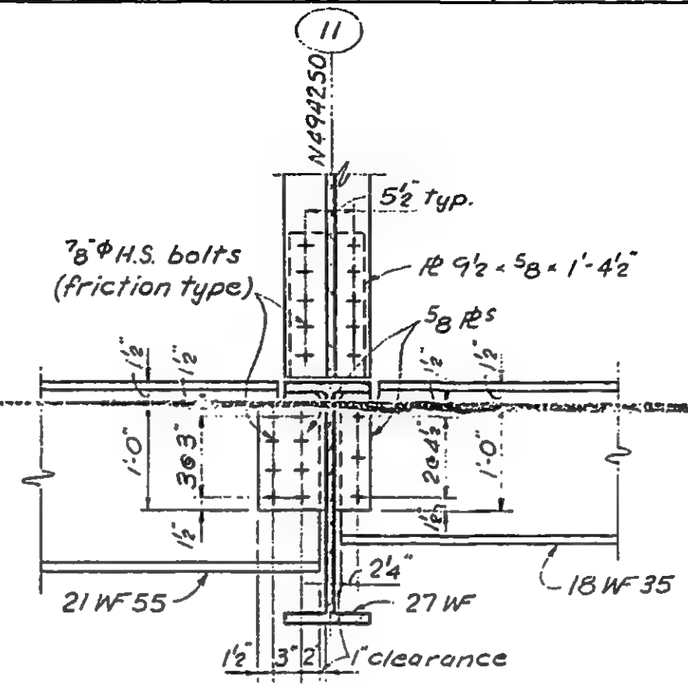

Section a-a

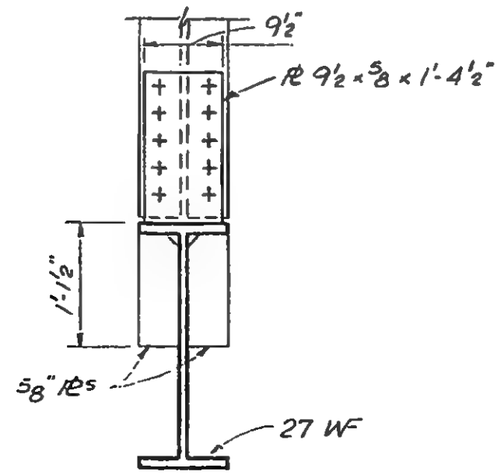

Section b-b

LICENSED PROFESSIONAL ENGINEER
LESLIE E. ROBERTSON
No. 31360
STATE OF NEW YORK

10-JK2-33

SKILLING - HELLE - CHRISTIANSEN - ROBERTSON Structural & Civil Engineers

PROJECT THE WORLD TRADE CENTER | TITLE DETAIL OF COLUMN J8-6 | DATE 4-5-68

REVISIONS
7-19-68
9-4-68
11-5-68

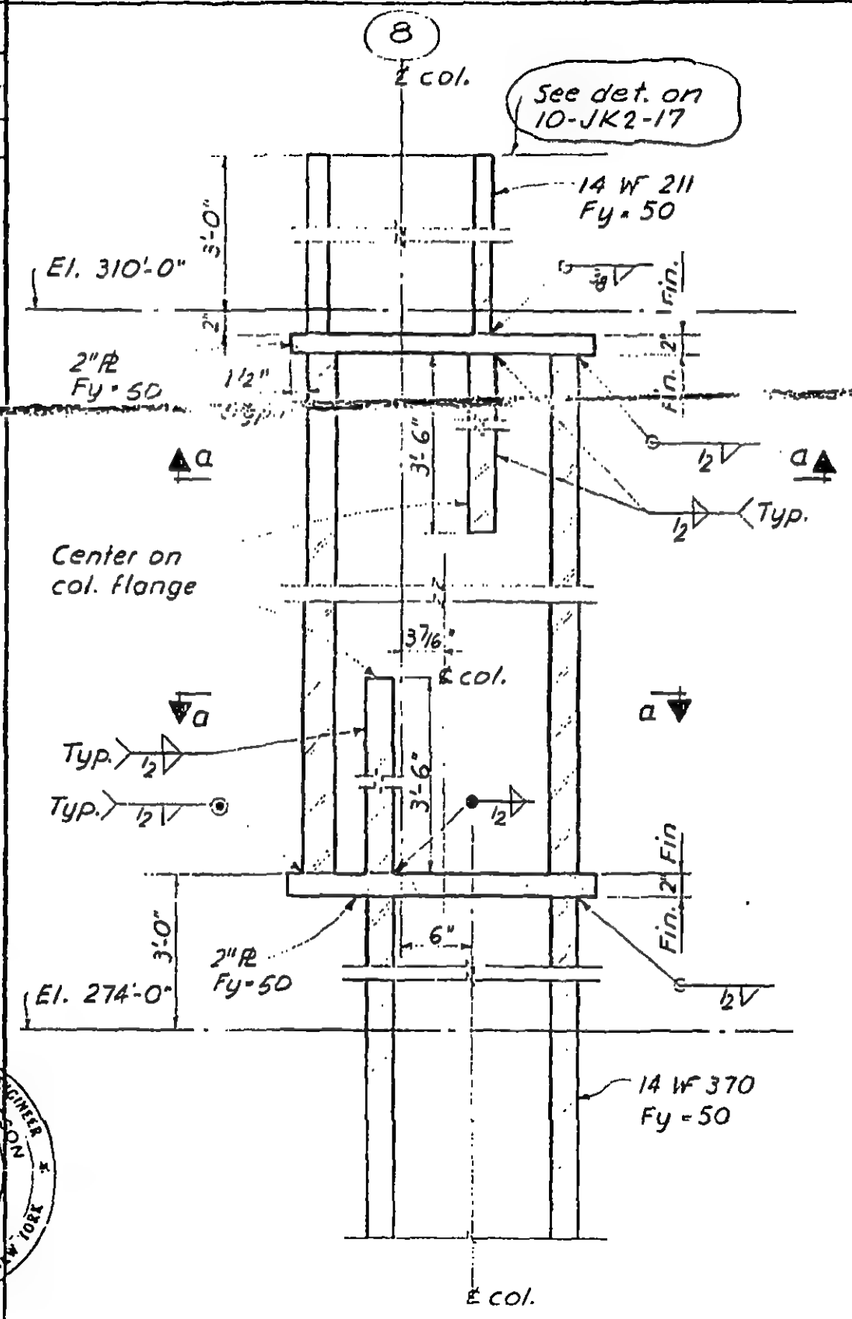

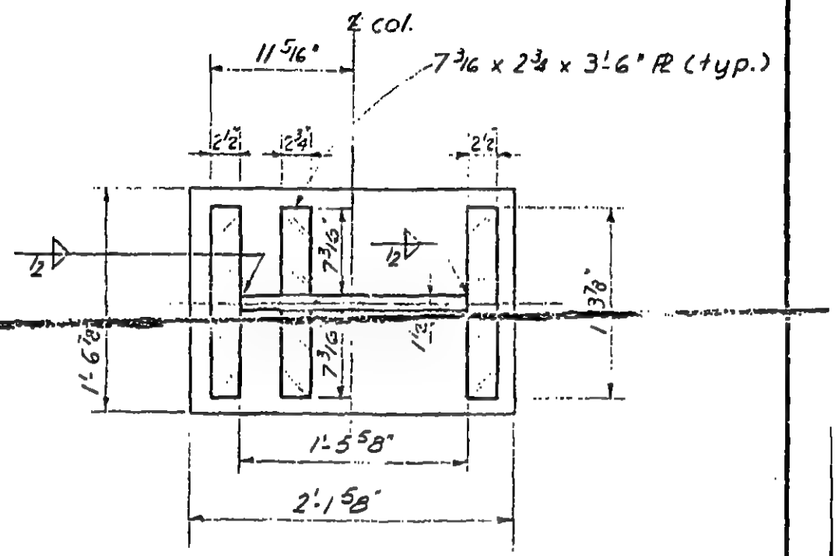

All col. material Fy = 50

Section a-a

LICENSED PROFESSIONAL ENGINEER
LESLIE E. ROBERTSON
No. 34360
UNIVERSITY OF THE STATE OF NEW YORK

10-31-68

10-JK2-34

SKILLING - HELLE - CHRISTIANSEN - ROBERTSON Structural & Civil Engineers

PROJECT THE WORLD TRADE CENTER | TITLE COLUMN DETAILS | DATE 4-5-68

REVISIONS
5-1-68
6-7-68

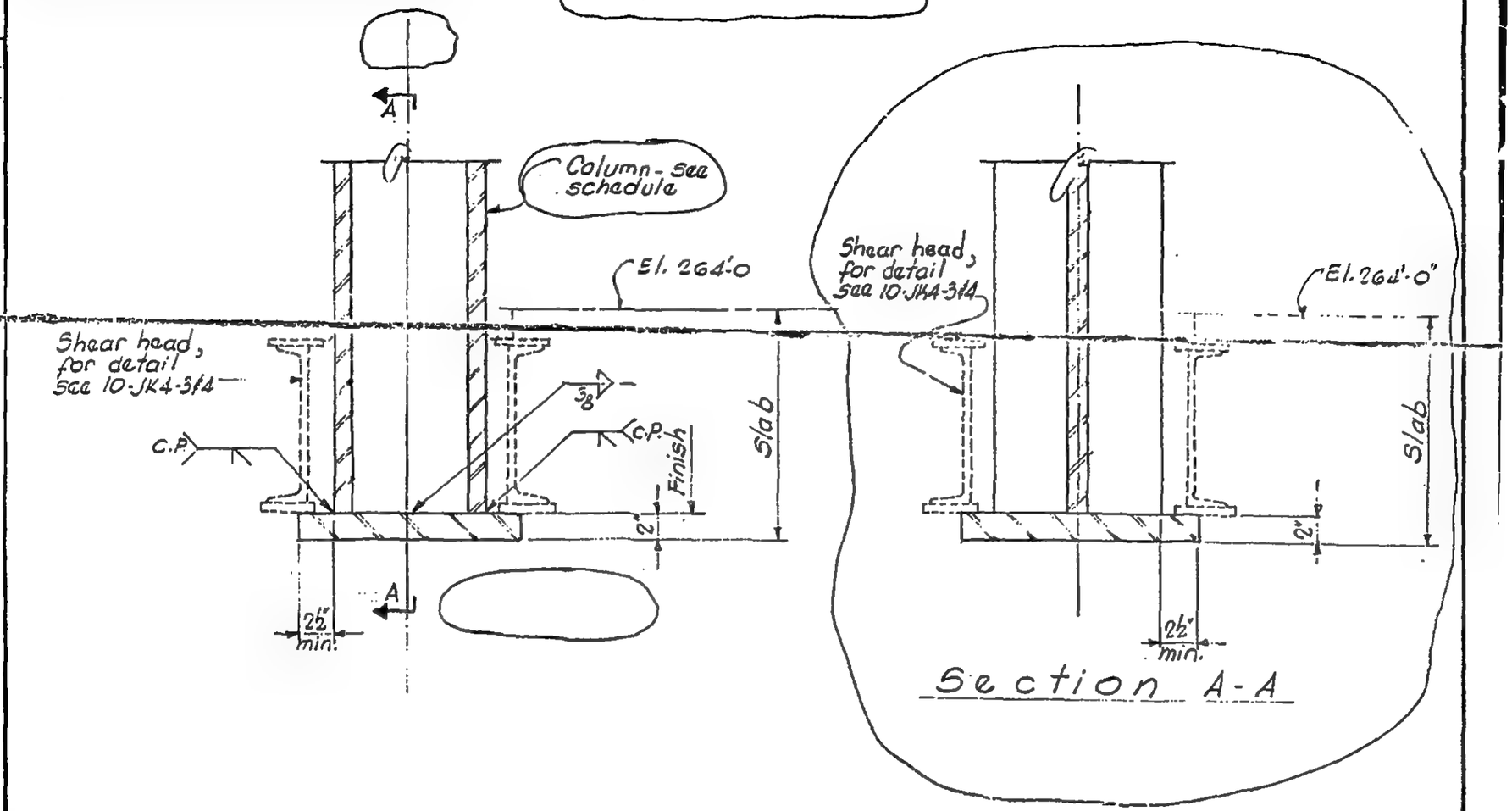

Section A-A

LICENSED PROFESSIONAL ENGINEER
LESLIE E. ROBERTSON
No. 34360
UNIVERSITY OF THE STATE OF NEW YORK

10-JK2-35

SKILLING - HELLE - CHRISTIANSEN - ROBERTSON Structural & Civil Engineers

PROJECT THE WORLD TRADE CENTER | TITLE COLUMN SPLICE DETAIL | DATE 6-7-68

REVISIONS
11-5-68
12-3-68

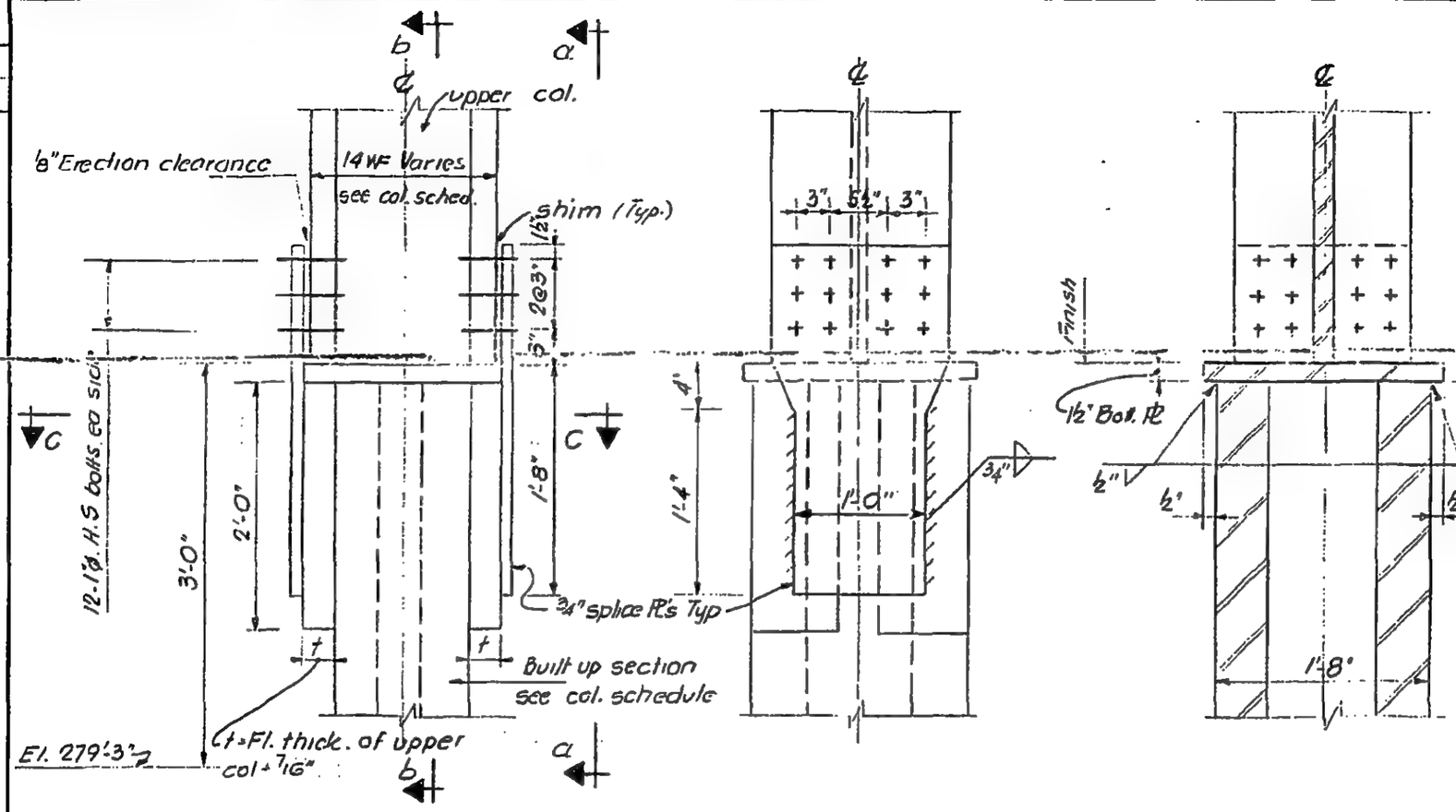

Elevation Section a-a Section b-b

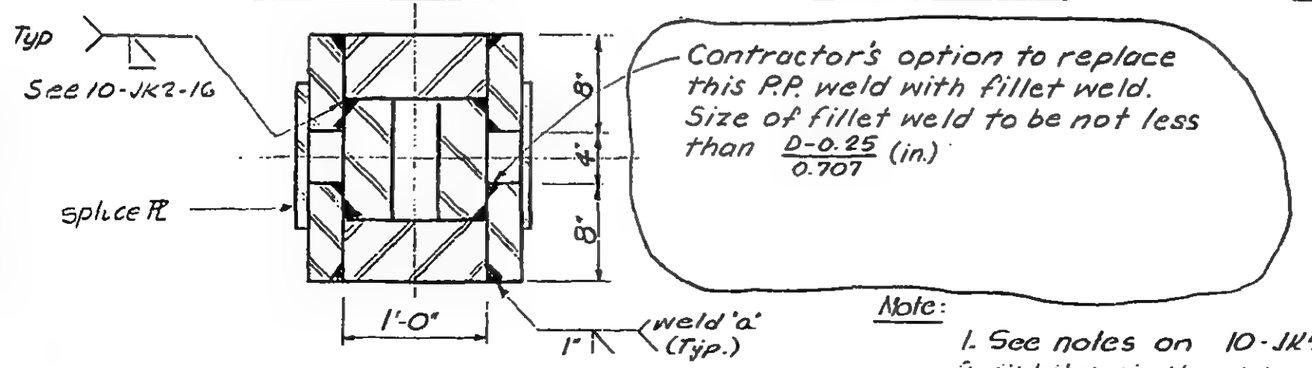

Section c-c

Note:
1. See notes on 10-JK2-36
2. Weld 'a' shall not be less than $D = \sqrt{\frac{T}{2}} + \frac{1}{4}$ Where T = Thickness of thinner PL of the joint.

10-JK2-35A

LICENSED PROFESSIONAL ENGINEER
LESLIE E. ROBERTSON
No. 34260
UNIVERSITY OF THE STATE OF NEW YORK

SKILLING - HELLE - CHRISTIANSEN - ROBERTSON Structural & Civil Engineers

PROJECT THE WORLD TRADE CENTER | TITLE COLUMN SPLICE DETAIL | DATE 6-7-68

REVISIONS

11-5-68

5-29-69

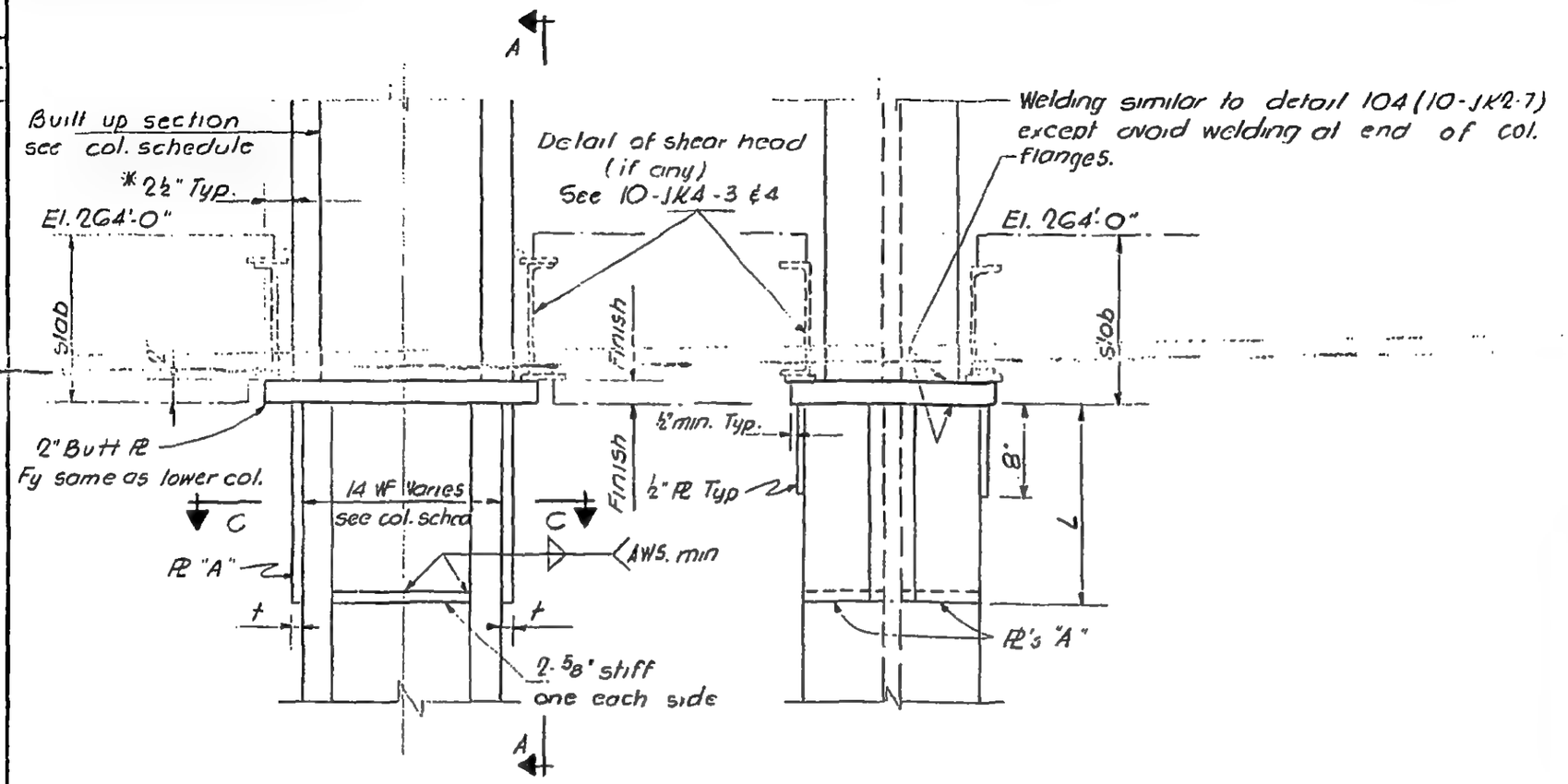

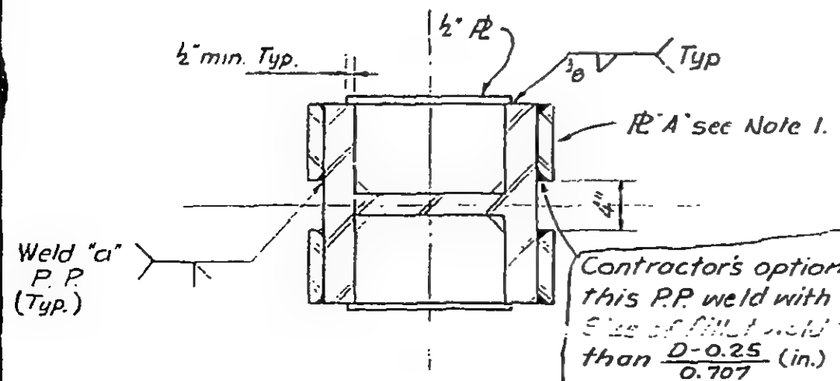

Section C-C

Contractor's option to replace this P.P. weld with fillet weld.
Size of fillet weld to be not less than $\frac{D-0.25}{0.707}$ (in.)
Weld "a" shall not be less than $D=\sqrt{t}+\frac{1}{4}$
Where t = thickness of thinner Pl at the joint.

Notes:

1. For col. No. & detail of Pl "A" see schedule on 10-JK2-35C
2. All welds to be E70xx
3. See Notes on 10-JK4-3- for temp. steel support under slab.
4. * If no shear-head occurs, But.-Pl to project only ½" from face of either upper or lower column.

LICENSED PROFESSIONAL ENGINEER
LESLIE E. ROBERTSON
No. 34360
UNIVERSITY OF THE STATE OF NEW YORK

S.C

REVIEWED E.L.

10-JK2-35B

SKILLING - HELLE - CHRISTIANSEN - ROBERTSON Structural & Civil Engineers

PROJECT THE WORLD TRADE CENTER | TITLE COLUMN SPLICE DETAIL | DATE 6-7-68

REVISIONS

9-4-68

COLUMN NO.	PL "A" t	PL "A" L	PL "A" Weld "a" (P.P.)
J72 - 7	1¼"	1'-8"	¾"
J72 - 8	1¼"	1'-8"	¾"
J72 - 9	1"	2'-0"	¾"
J72 - 10	1⅝"	1'-8"	¾"
J72 - 11	1"	2'-0"	¾"
J72 - 12	1¾"	1'-10"	⅞"
J73 - 7	2⅜"	1'-10"	⅞"
J73 - 8	2⅜"	1'-10"	⅞"
J73 - 9	2¼"	1'-10"	⅞"
J73 - 11	2¼"	1'-10"	⅞"
J73 - 12	2⅜"	1'-10"	⅞"
J74 - 6	NOT	REQ'D	

COLUMN NO.	PL "A" t	PL "A" L	PL "A" Weld "a" (P.P.)
J74 - 7	NOT	REQ'D	
J74 - 8	1¼"	1'-8"	¾"
J74 - 9	1⅝"	1'-8"	¾"
J74 - 10	1⅜"	1'-8"	¾"
J74 - 11	1¼"	1'-8"	¾"
J75 - 6	1⅝"	1'-8"	¾"
J75 - 7	1¾"	1'-10"	⅞"
J75 - 8	NOT	REQ'D	
J75 - 14	NOT	REQ'D	
J75 - 15	1⅝"	1'-8"	¾"

LICENSED PROFESSIONAL ENGINEER
LESLIE E. ROBERTSON
No. 34360
UNIVERSITY OF THE STATE OF NEW YORK

Notes:

1. See detail on 10-JK2-35B
2. PL "A" to have Fy = 42 ksi

10-JK2-35C

SKILLING - HELLE - CHRISTIANSEN - ROBERTSON Structural & Civil Engineers

PROJECT THE WORLD TRADE CENTER | TITLE SCHEDULE OF COLUMN SPLICES | DATE 4-26-68

REVISIONS
9-4-68
4-4-69

Det. No.	Type	Column sizes Upper	Column sizes Lower	Elev. of splice	H	℄-M	Splice ℛ W_T	Splice ℛ W_B	Splice ℛ A	Splice ℛ Thick	No. & size of bolts	No. of rows	g	Welds #1	Welds #2	Welds #3
1		See Detail on 10-JK2-38														
2	I	14WF370	14WF370	277'-0"	1'-9"	1'-5⅝"	15"	10"	15"	¾"	10-⅞ϕ	5	11½"	9/16"	½"	
3	I	14WF264	14WF264	277'-0"	1'-6"	1'-8"	15"	10"	15"	⅝"	6-⅞ϕ	3	11½"	7/16"	⅜"	
4	I	14WF370	14WF370	270'-11½"	1'-7"		15"	10"	15"	¾"	10-⅞ϕ	5	11½"	9/16"		
5	I	14WF287	14WF287	267'-0"	1'-9"		15"	10"	15"	¾"	8-⅞ϕ	4	11½"	½"		
6	I	14WF342	14WF342	277'-0"	1'-10"		15"	10"	15"	¾"	8-⅞ϕ	4	11½"	½"		
7	I	14WF550	14WF605 + ℛs 14×3	277'-0"	2'-0"		17"	10"	15"	⅞"	12-1"ϕ	6	11½"	⅝"		

Notes:
1. See Dwg. 10-JK2-37 for Type I column splice detail.
2. Material:
   a. Splice ℛs — A-36
   b. Other ℛs — To have Fy same as lower column.
3. All welds to be E70xx.
4. All bolts to be A-325 H.S. Friction Type.

LICENSED PROFESSIONAL ENGINEER LESLIE E. ROBERTSON No. 34360 UNIVERSITY OF THE STATE OF N.Y.

DRAWN S.C.

REVIEWED E.L.

10-JK2-36

SKILLING - HELLE - CHRISTIANSEN - ROBERTSON Structural & Civil Engineers

PROJECT THE WORLD TRADE CENTER | TITLE COLUMN SPLICE DETAILS | DATE 4-26-68

REVISIONS

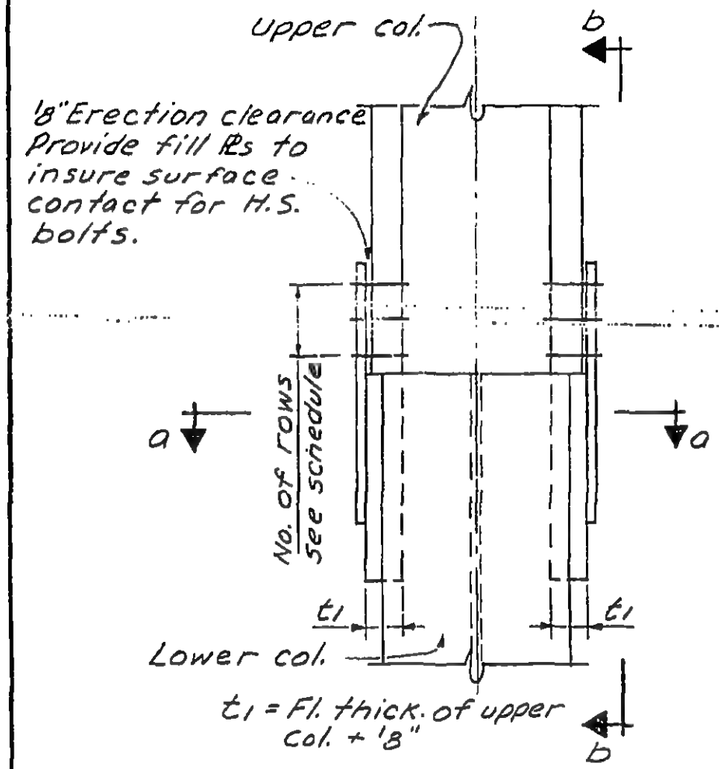

Elevation

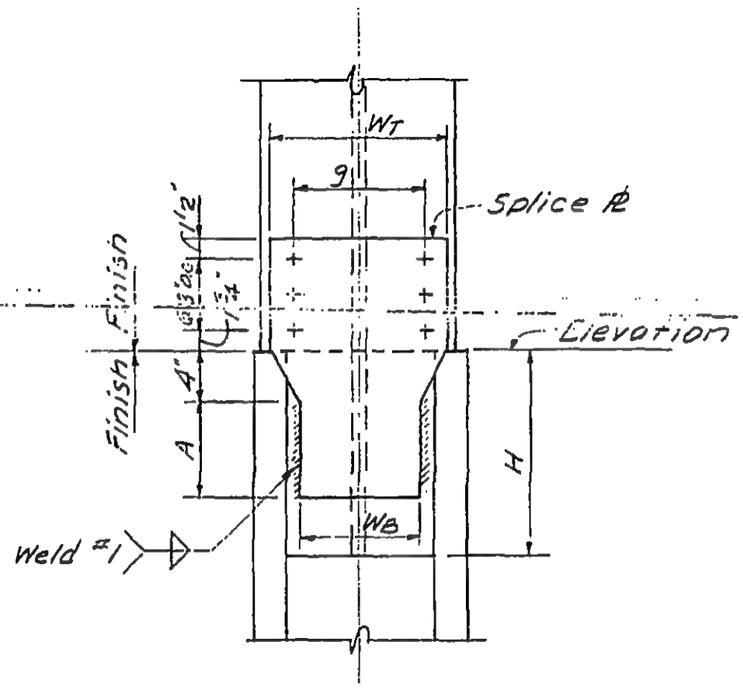

Section b-b

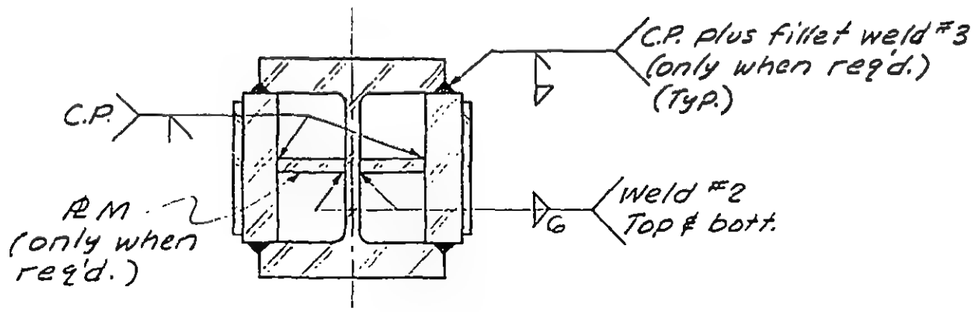

Section a-a

Note:
1. See schedule on 10-JK2-36.

TYPE I

10-JK2-37

LICENSED PROFESSIONAL ENGINEER LESLIE E. ROBERTSON No. 34360 UNIVERSITY OF THE STATE OF NEW YORK

4

SKILLING - HELLE - CHRISTIANSEN - ROBERTSON Structural & Civil Engineers

PROJECT THE WORLD TRADE CENTER | TITLE COLUMN SPLICE DETAILS | DATE 4-26-68

REVISIONS

6-17-68
11-5-68
1-8-69

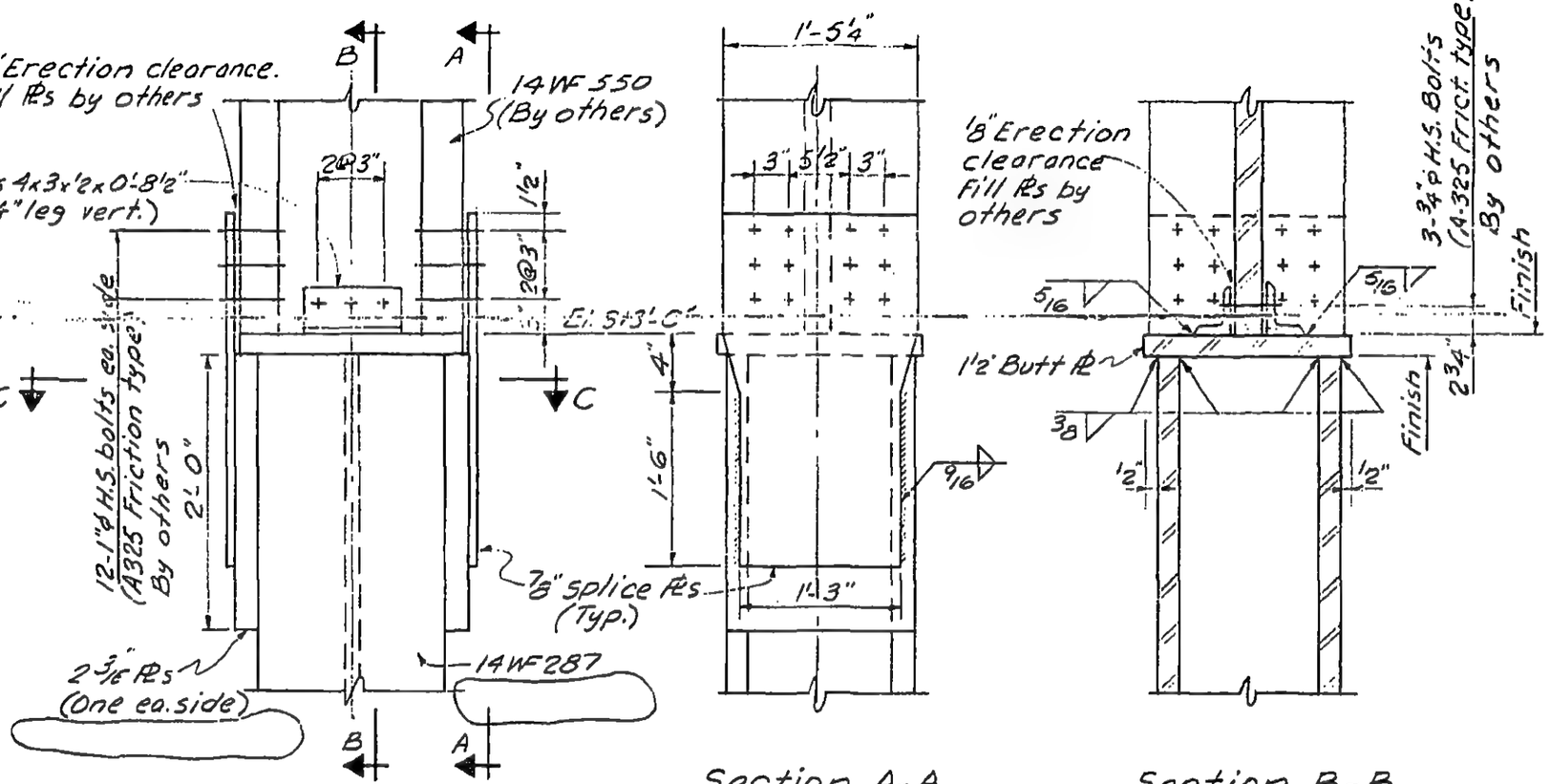

Elevation

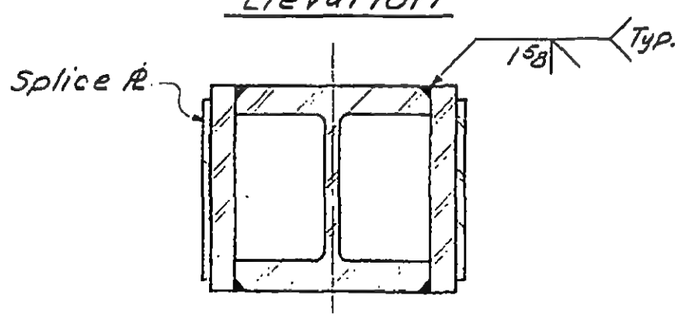

Section C-C

Section A-A

Section B-B

Note:
1. See notes on 10-JK2-36.

LICENSED PROFESSIONAL ENGINEER LESLIE E. ROBERTSON No. 34360 UNIVERSITY OF THE STATE OF N.Y.

DRAWN S.C.
REVIEWED E.L.

10-JK2-38

SKILLING, HELLE, CHRISTIANSEN, ROBERTSON — Structural & Civil Engineers

PROJECT: THE WORLD TRADE CENTER | TITLE: COLUMN SPLICE DETAILS (J9-6) | DATE: 1-8-69

REVISIONS

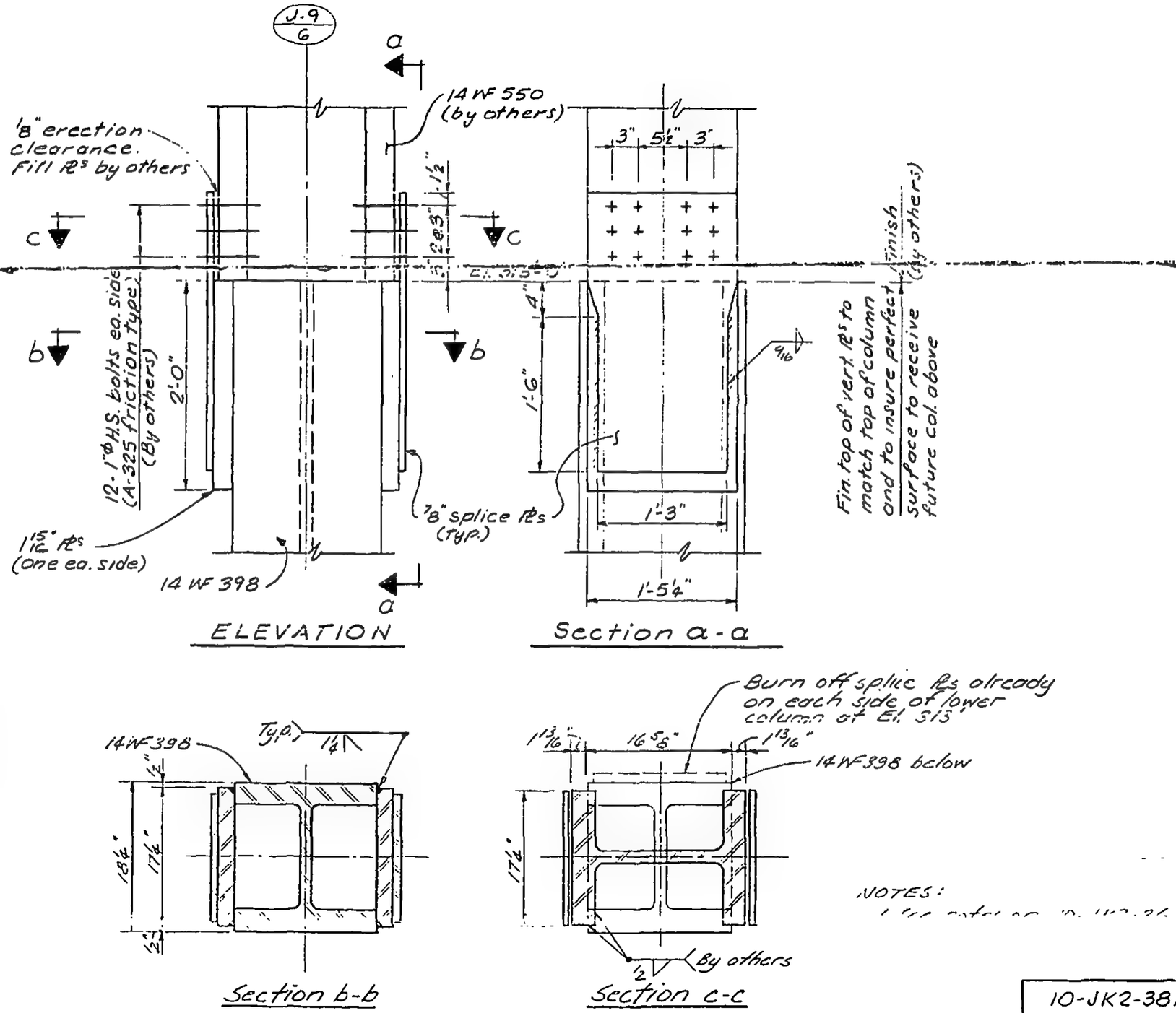

NOTES:

DESIGNED

DRAWN S.C.

REVIEWED E.L.

10-JK2-38A

SKILLING - HELLE - CHRISTIANSEN - ROBERTSON Structural & Civil Engineers

PROJECT THE WORLD TRADE CENTER | TITLE COLUMN SPLICE DETAIL | DATE 6-7-68

REVISIONS

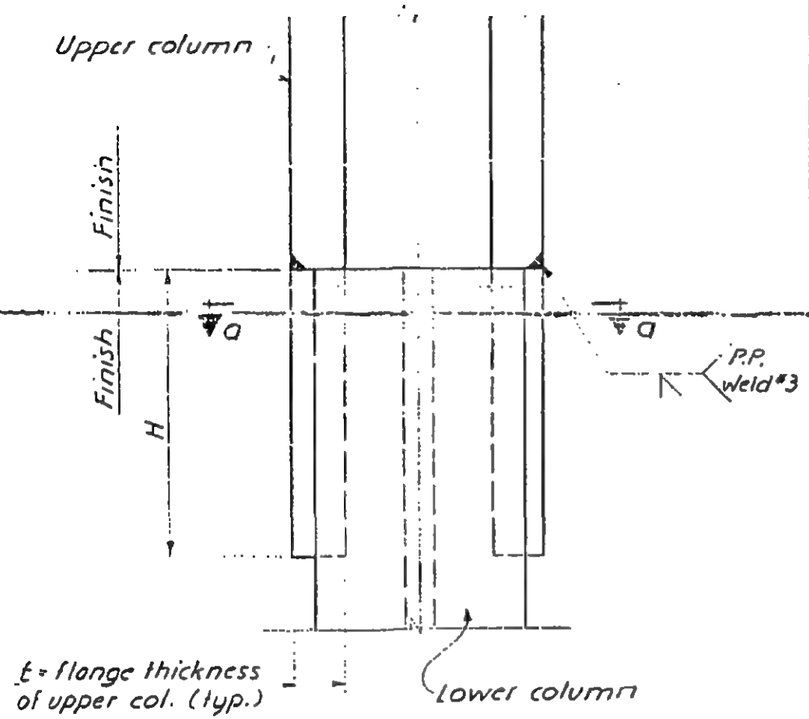

SCHEDULE

DET. NO.	COL. SIZE UPPER	COL. SIZE LOWER	ELEV. OF SPLICE	H	PL M	WELD #1	WELD #2	WELD #3
1	14 WF 665	14 WF 665	293'-0"	2'-3"		1/2"		1 1/8"

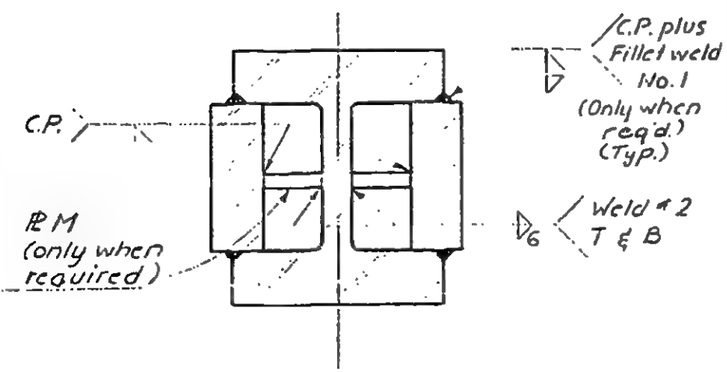

Section a-a

Notes:
1. All PLs to have Fy same as lower col.
2. All welds to be E 70 xx.

LICENSED PROFESSIONAL ENGINEER
LESLIE E. ROBERTSON
No. 34160
UNIVERSITY OF THE STATE OF NEW YORK

10-JK2-39

SKILLING - HELLE - CHRISTIANSEN - ROBERTSON Structural & Civil Engineers

PROJECT THE WORLD TRADE CENTER | TITLE COLUMN SPLICE DETAIL | DATE 6-7-68

REVISIONS

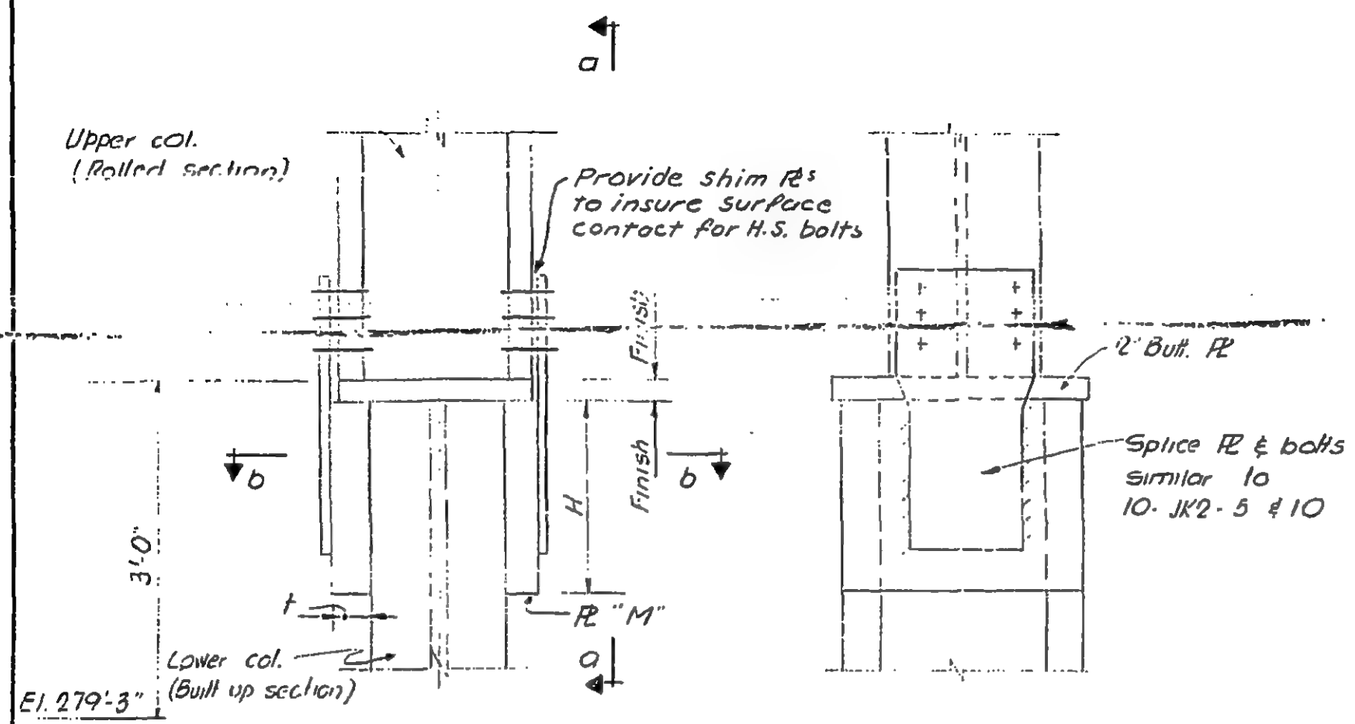

Elevation

Section a-a

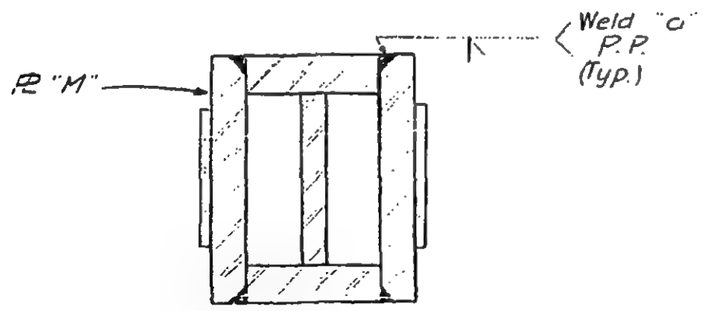

Section b-b

Notes.

1. See 10-JK2-41 for schedule
2. PL M to have Fy same as lower col.
3. All welds to be E 70xx

LICENSED PROFESSIONAL ENGINEER
LESLIE E. ROBERTSON
No. 34360
UNIVERSITY OF THE STATE OF NEW YORK

10-JK2-40

SKILLING - HELLE - CHRISTIANSEN - ROBERTSON Structural & Civil Engineers

PROJECT THE WORLD TRADE CENTER | TITLE COLUMN SPLICE DETAIL | DATE 6-7-68

REVISIONS

11-5-68

DETAIL NO	COLUMN SIZES UPPER	LOWER	PL "M" t	PL "M" H	WELD "a" (P.P.)
1	14 WF 211	I 2 PL's 12 x 2 3/4 / 1 PL 14 1/2 x 1 1/2	2"	2'-0"	1 1/4"
2	14 WF 219	I 2 PL's 12 x 2 3/4 / 1 PL 14 1/2 x 1 1/2	2 1/16"	2'-4"	1 1/4"
3	14 WF 167	I 2 PL's 12 x 2 1/2 / 1 PL 15 x 1	1 11/16"	1'-10"	1 1/8"
4	14 WF 142	I 2 PL's 12 x 2 / 1 PL 16 x 1	1 1/2"	1'-10"	1"
5	14 WF 264	I 2 PL's 12 x 3 / 1 PL 14 x 2	2 3/8"	2'-6"	1 3/8"
6	14 WF 228	I 2 PL's 12 x 5 / 1 PL 10 x 3	2 1/8"	2'-4"	1 5/16"
7	14 WF 211	I 2 PL's 12 x 5 / 1 PL 10 x 3	2"	2'-2"	1 1/8"
8	14 WF 150	I 2 PL's 12 x 2 / 1 PL 16 x 1	1 9/16"	2'-0"	1"
9	14 WF 136	I 2 PL's 12 x 2 / 1 PL 16 x 1	1 1/2"	2'-2"	7/8"
10	14 WF 176	I 2 PL's 12 x 5 / 1 PL 10 x 3	1 3/4"	2'-0"	1 1/8"
11	14 WF 119	I 2 PL's 12 x 5 / 1 PL 10 x 3	1 3/8"	1'-10"	7/8"

NOTE

1 See Detail on 10-JK2 40

LICENSED PROFESSIONAL ENGINEER LESLIE E. ROBERTSON No. 34360 UNIVERSITY OF THE STATE OF NEW YORK

10-JK2-41

SKILLING, HELLE, CHRISTIANSEN, ROBERTSON — Structural & Civil Engineers

PROJECT: THE WORLD TRADE CENTER | TITLE: COLUMN SPLICE DETAIL | DATE: 4-18-69

REVISIONS

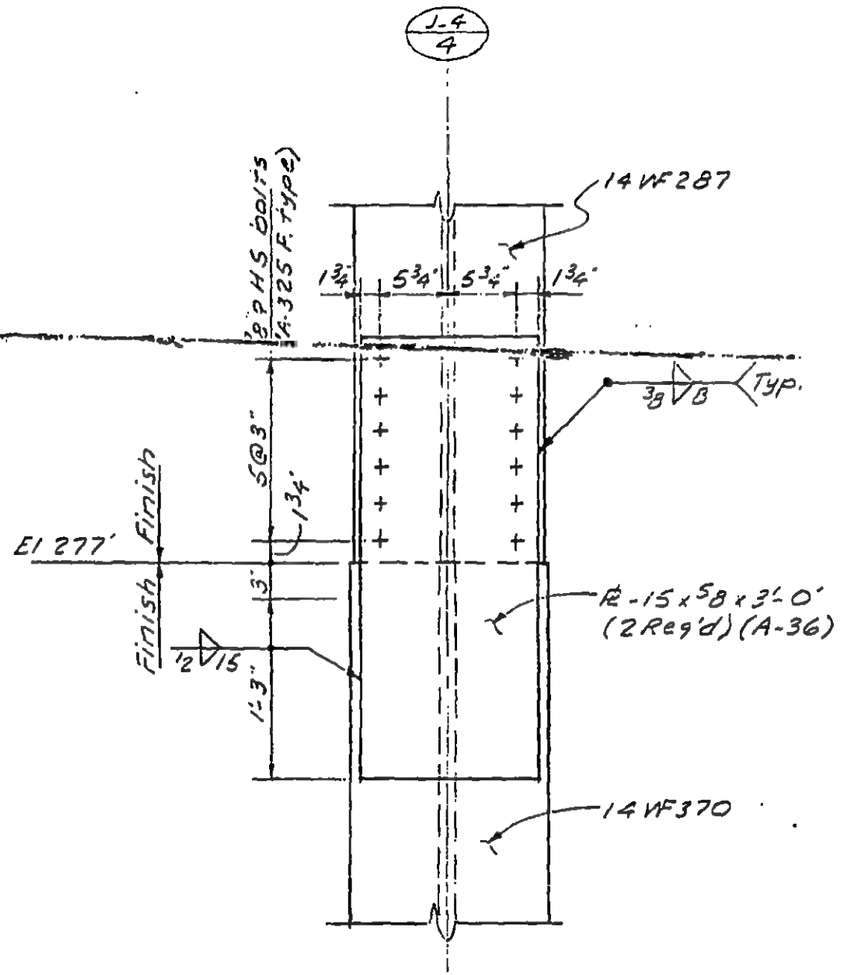

LICENSED PROFESSIONAL ENGINEER
LESLIE E. ROBERTSON
No 34360
UNIVERSITY OF THE STATE OF NEW YORK

DESIGNED

DRAWN A.F.

REVIEWED E.J

10-JK2-42

SKILLING, HELLE, CHRISTIANSEN, ROBERTSON — Structural & Civil Engineers

PROJECT: THE WORLD TRADE CENTER | TITLE: DETAIL OF COLUMN CAP OVER COL. K44-1 | DATE: 8-10-70

REVISIONS

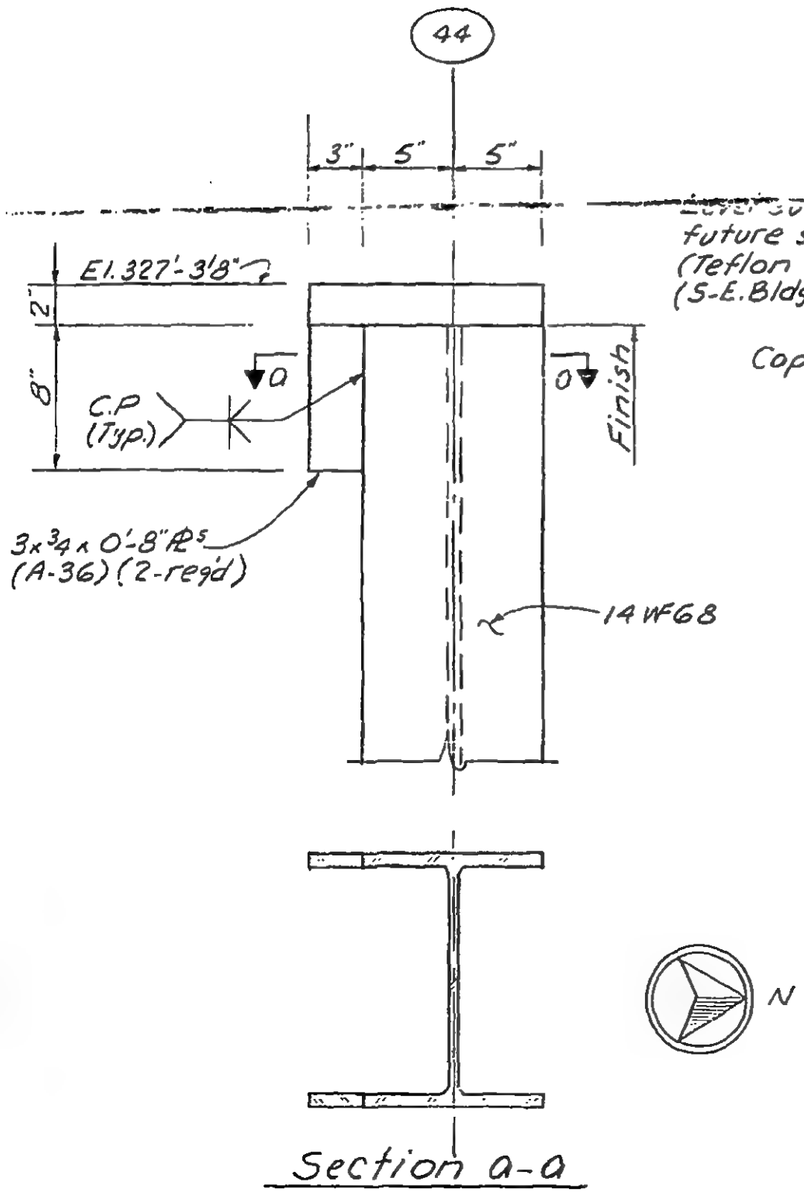

Section a-a

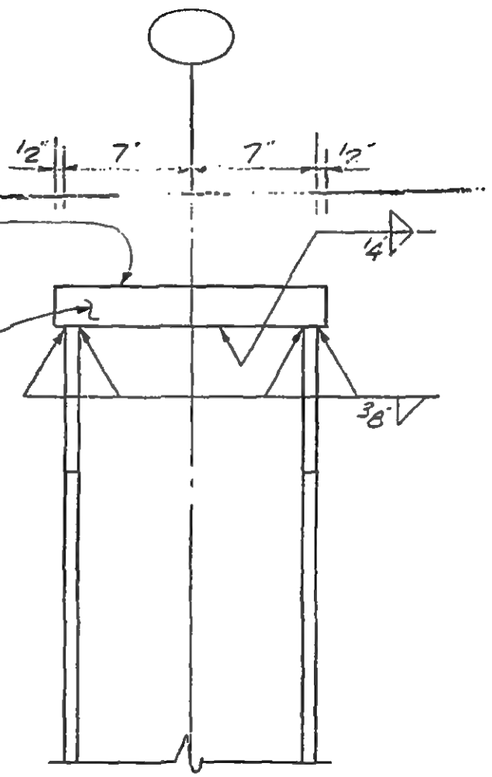

LICENSED PROFESSIONAL ENGINEER — LESLIE E. ROBERTSON — No 34360 — UNIVERSITY OF THE STATE OF NEW YORK

R

DESIGNED

DRAWN: A.L. FRANQUI

REVIEWED: E. LIU

10-JK2-43

SKILLING - HELLE - CHRISTIANSEN - ROBERTSON Structural & Civil Engineers

PROJECT THE WORLD TRADE CENTER | TITLE TYPICAL DETAIL OF COLUMN BASE-PLATE | DATE 10-20-67

REVISIONS
11-8-67 Gen revisions
2-28-68
6-7-68
9-4-68

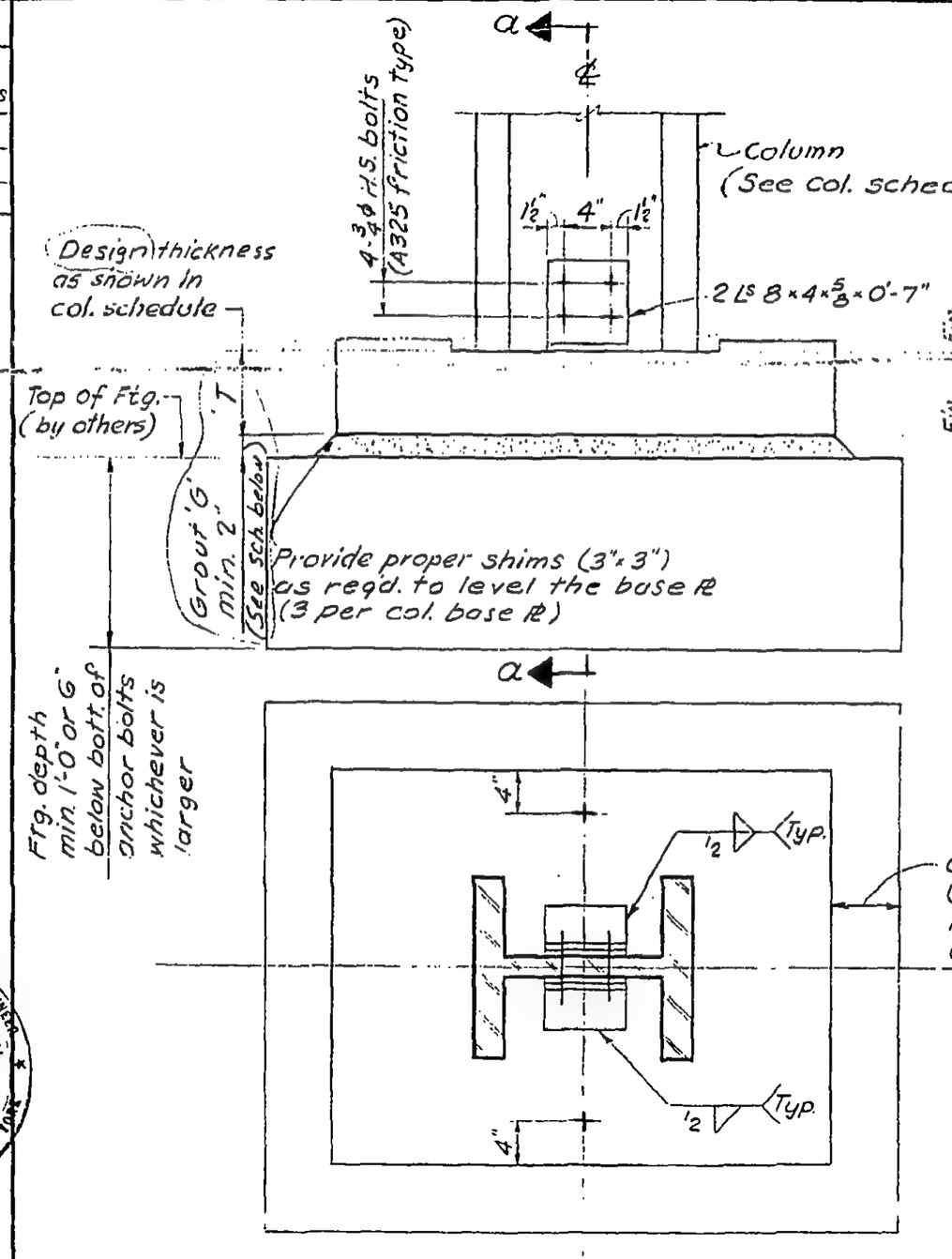

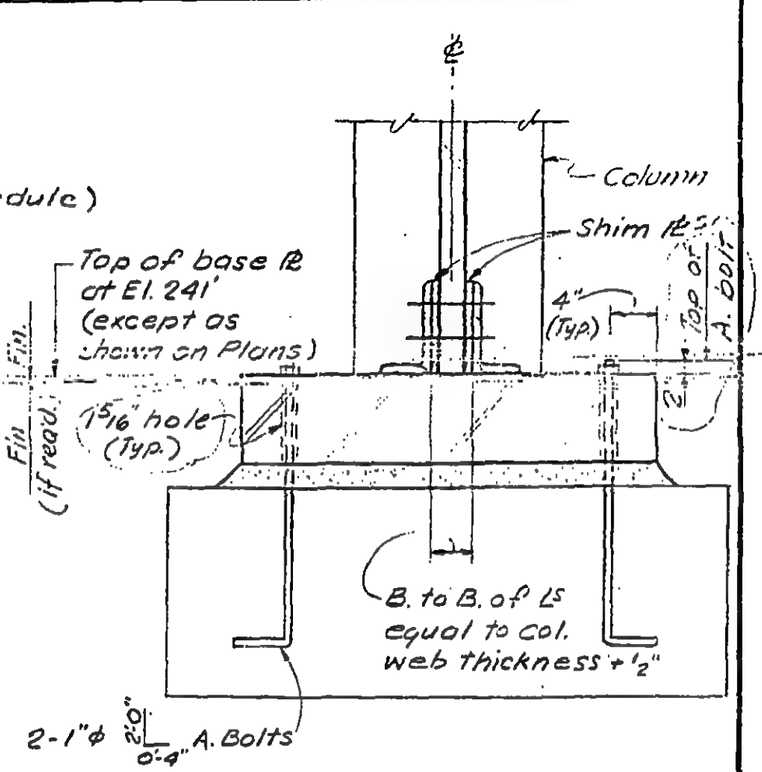

Section a-a

Design thickness (T)	Grout thickness (G)
N	2"
N 1/8	2 3/8"
N 1/4	2 1/4"
N 3/8	2 1/8"
N 1/2	2"
N 5/8	2 3/8"
N 3/4	2 1/4"
N 7/8	2 1/8"

Where N is any intener of base ℞ thickness

LICENSED PROFESSIONAL ENGINEER LESLIE E. ROBERTSON No. 34360 UNIVERSITY OF THE STATE OF NEW YORK

10-JK3-2

SKILLING - HELLE - CHRISTIANSEN – ROBERTSON Structural & Civil Engineers

PROJECT THE WORLD TRADE CENTER | TITLE DETAIL OF COLUMN BASE PLATE J3-14 | DATE 6-7-68

REVISIONS

9-4-68

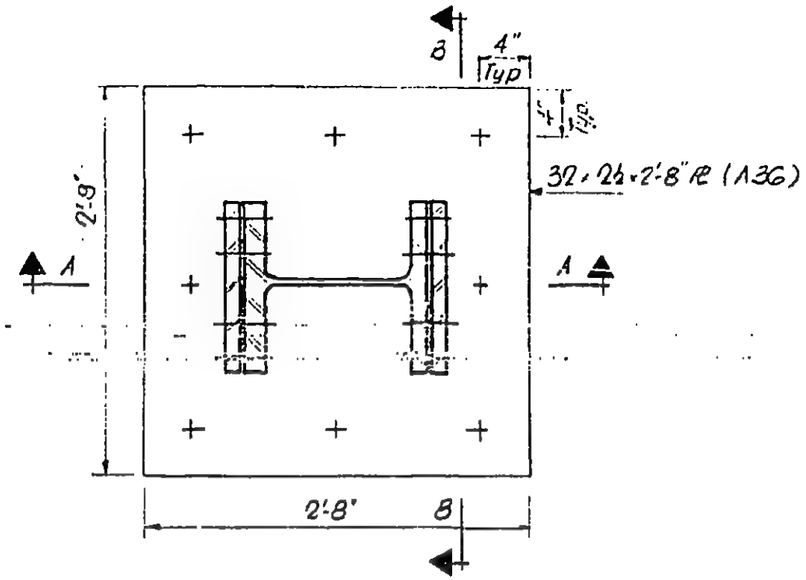

Plan

Notes:

1. All welds to be E 70 xx
2. Provide leveling shim PLs as shown on 10-JK3-2

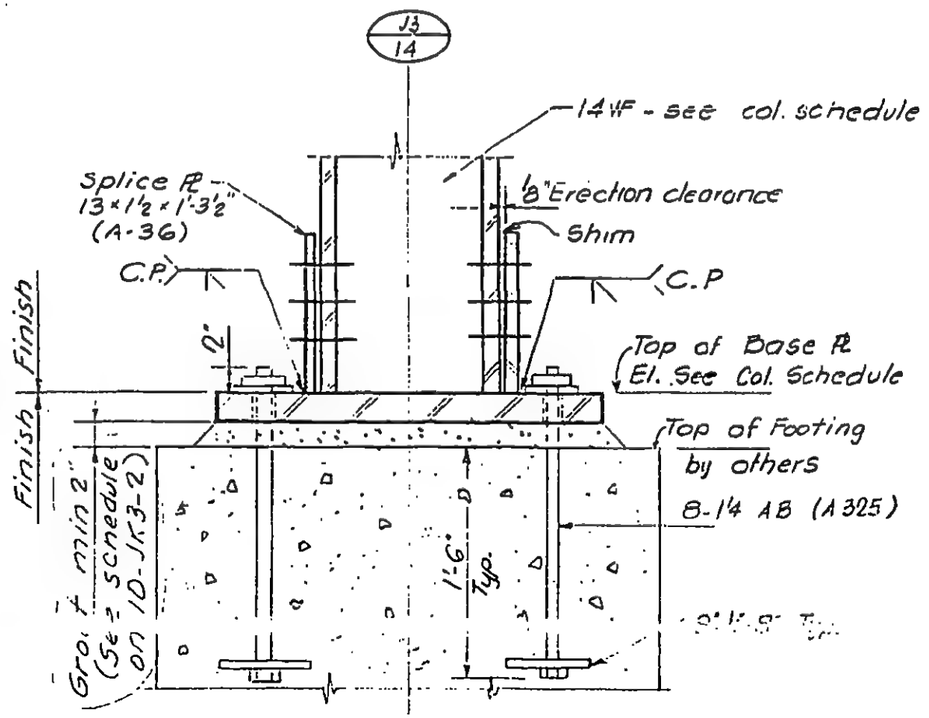

Section A-A

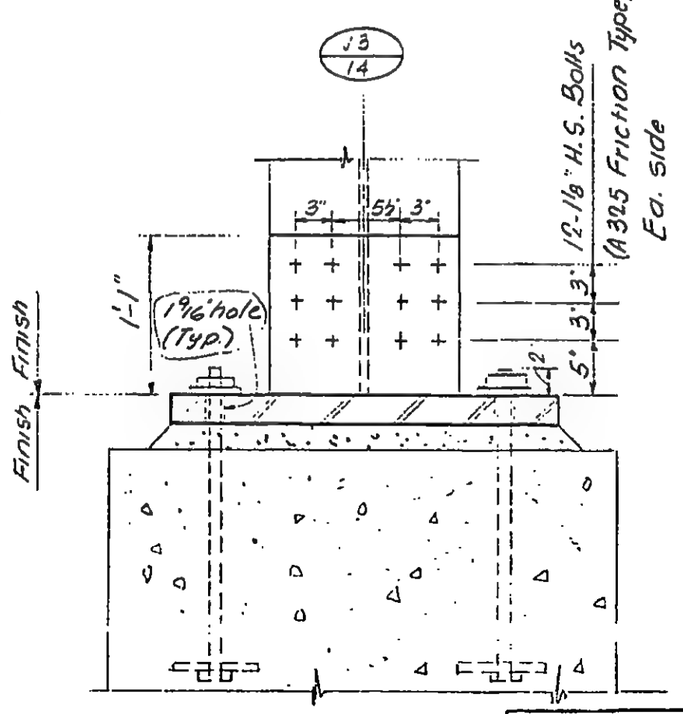

Section B-B

10-JK3-2A

LICENSED PROFESSIONAL ENGINEER
LESLIE E. ROBERTSON
NO. 34360
THE STATE OF NEW YORK

SKILLING - HELLE - CHRISTIANSEN - ROBERTSON Structural & Civil Engineers

PROJECT THE WORLD TRADE CENTER | TITLE COLUMN BASE PL DETAIL AT TRUCK RAMPS | DATE 6-7-68

REVISIONS

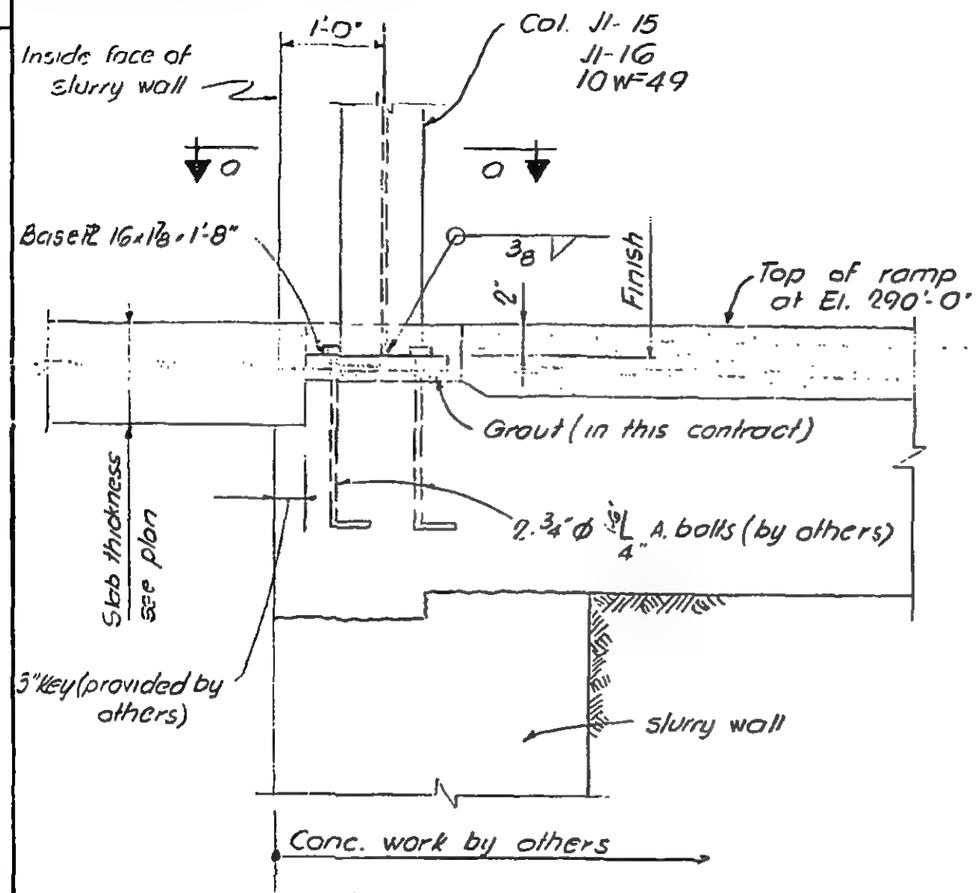

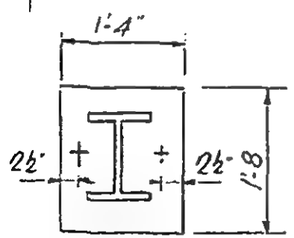

Section a-a

LICENSED PROFESSIONAL ENGINEER
LESLIE E. ROBERTSON
No. 34360
OF THE STATE OF NEW YORK

10-JK3-2B

SKILLING - HELLE - CHRISTIANSEN - ROBERTSON Structural & Civil Engineers

PROJECT THE WORLD TRADE CENTER | TITLE TYP. COLUMN BASE-℄ DET. UNDER BOX SECT. COL. | DATE 6-28-68

REVISIONS

9-4-68

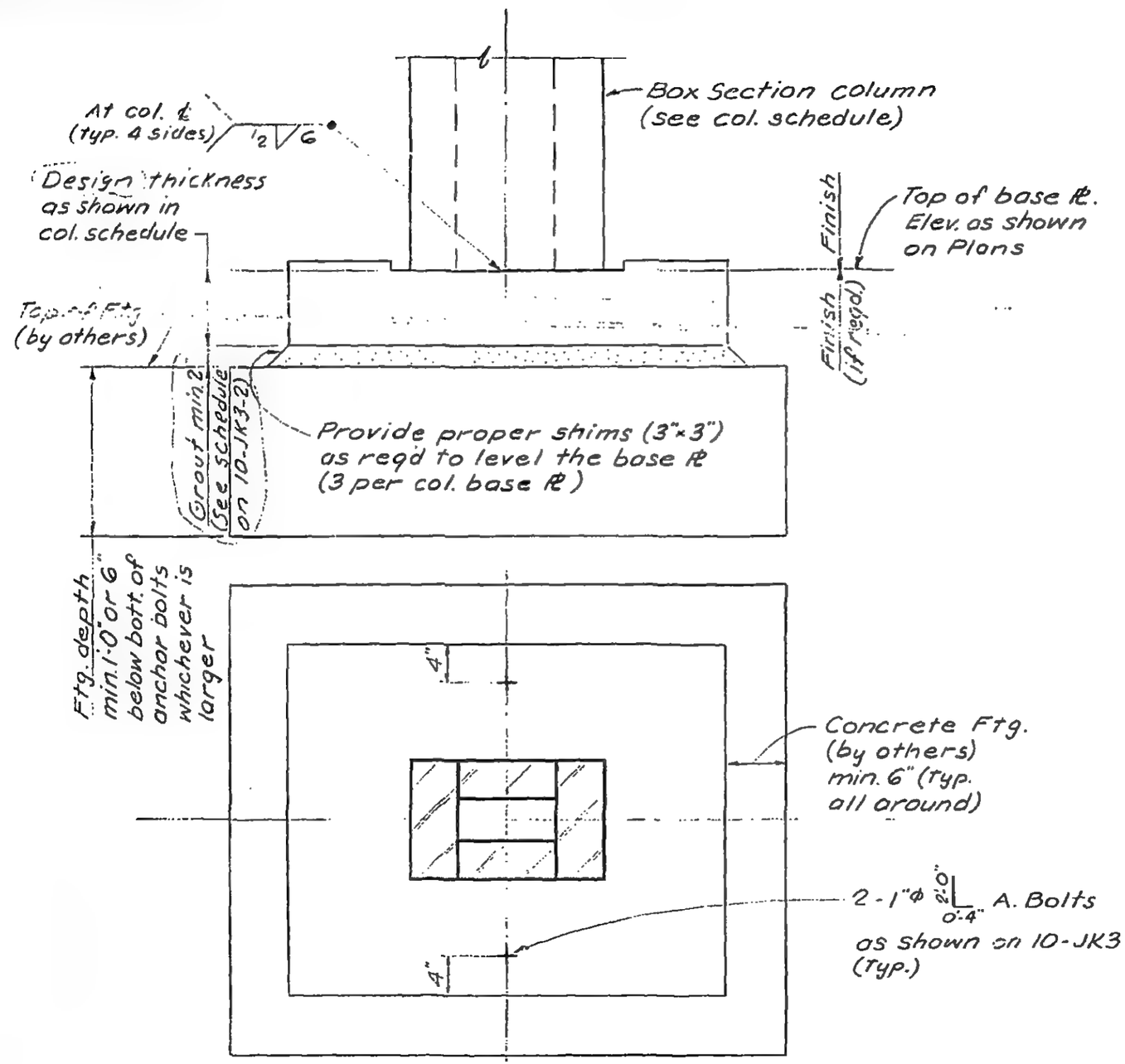

Plan

10-JK3-2C

LICENSED PROFESSIONAL ENGINEER LESLIE E. ROBERTSON NO. 34360 OF THE STATE OF NEW YORK

SKILLING, HELLE, CHRISTIANSEN, ROBERTSON — Structural & Civil Engineers

PROJECT THE WORLD TRADE CENTER | TITLE TYP DETAIL OF COLUMN BASE - PLs (with * * as shown on plans) | DATE 8-9-68

REVISIONS

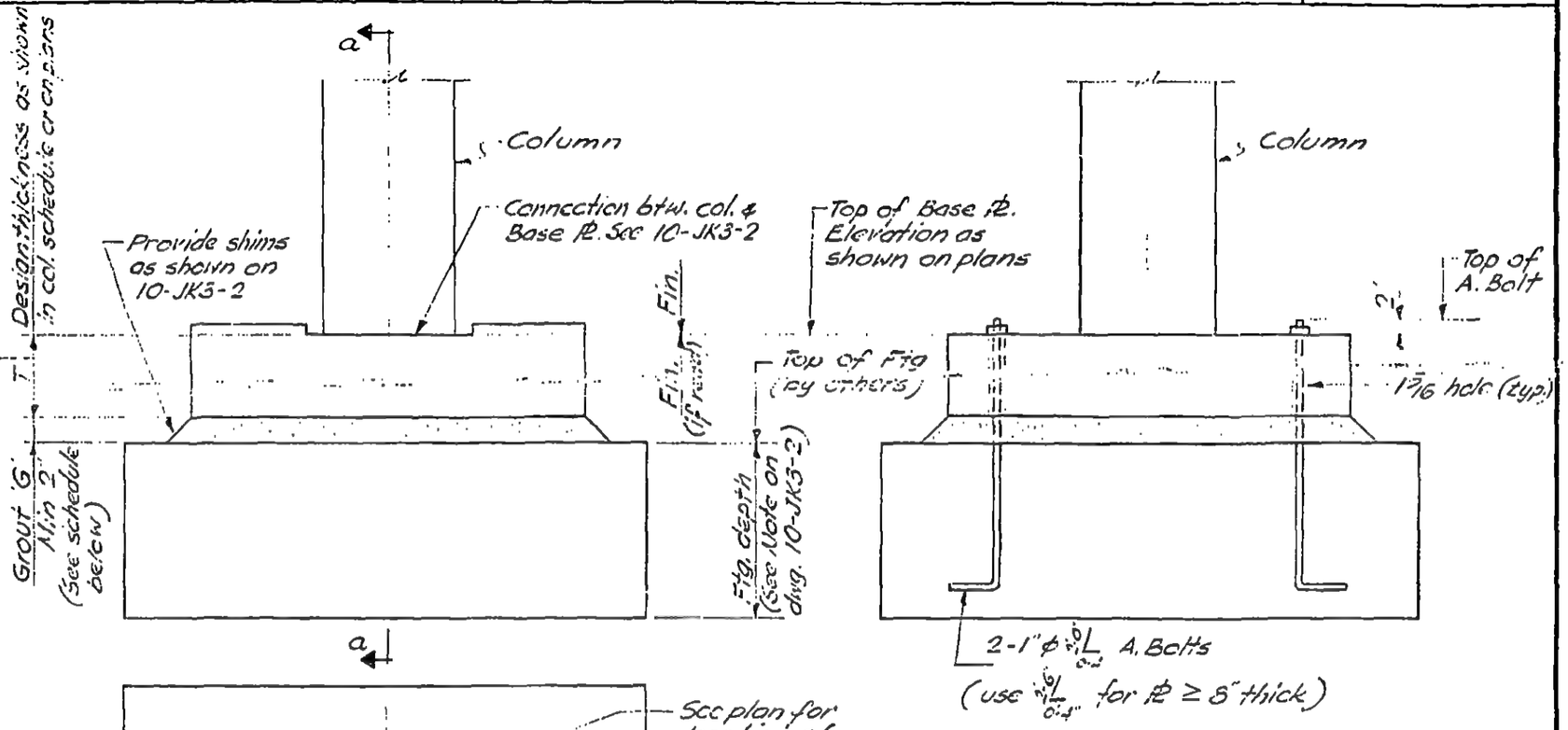

Section a-a

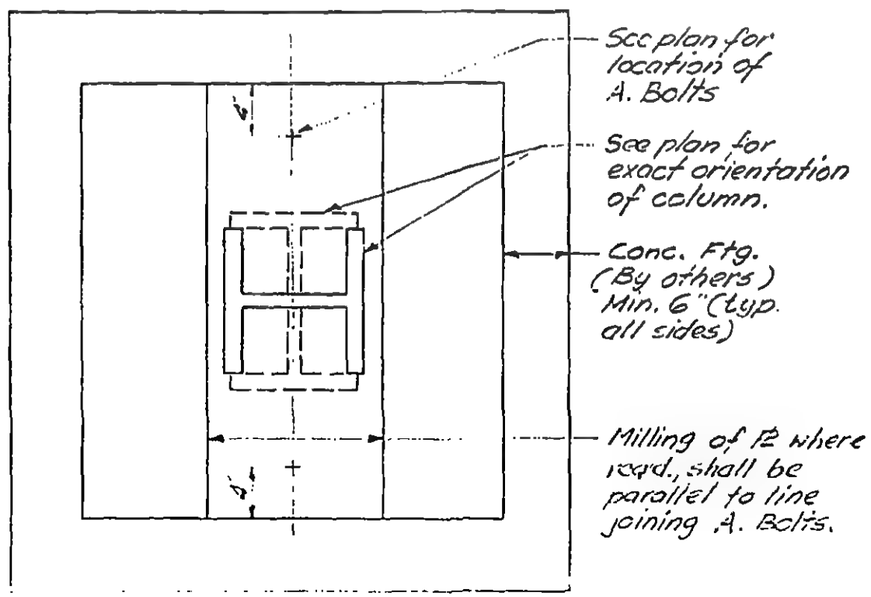

Plan

Design thickness (T)	Grout thickness (G)
N	2"
N⅛	2⅛"
N¼	2¼"
N⅜	2⅜"
N½	2"
N⅝	2⅝"
N¾	2¾"
N⅞	2⅞"

Where N is any integer of Base Pl thickness

LICENSED PROFESSIONAL ENGINEER LESLIE E. ROBERTSON No. 34360 UNIVERSITY OF THE STATE OF NEW YORK

DESIGNED

DRAWN

REVIEWED

10-JK3-2D

SKILLING, HELLE, CHRISTIANSEN, ROBERTSON — Structural & Civil Engineers

PROJECT THE WORLD TRADE CEIITER | TITLE DETAIL OF COLUMN BASE PLATE M42-3 | DATE 4-17-69

REVISIONS

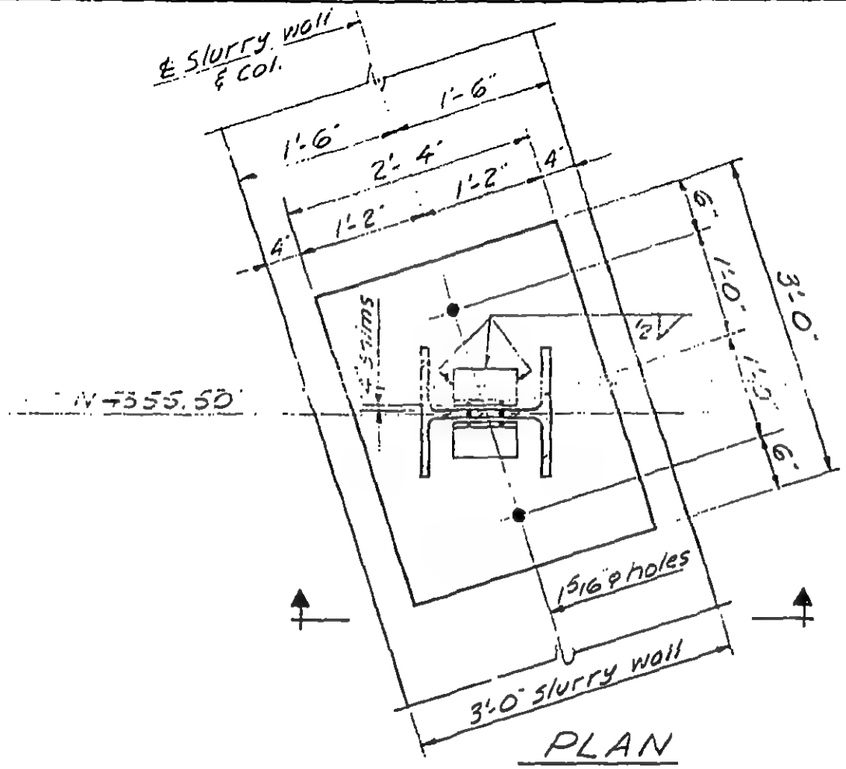

PLAN

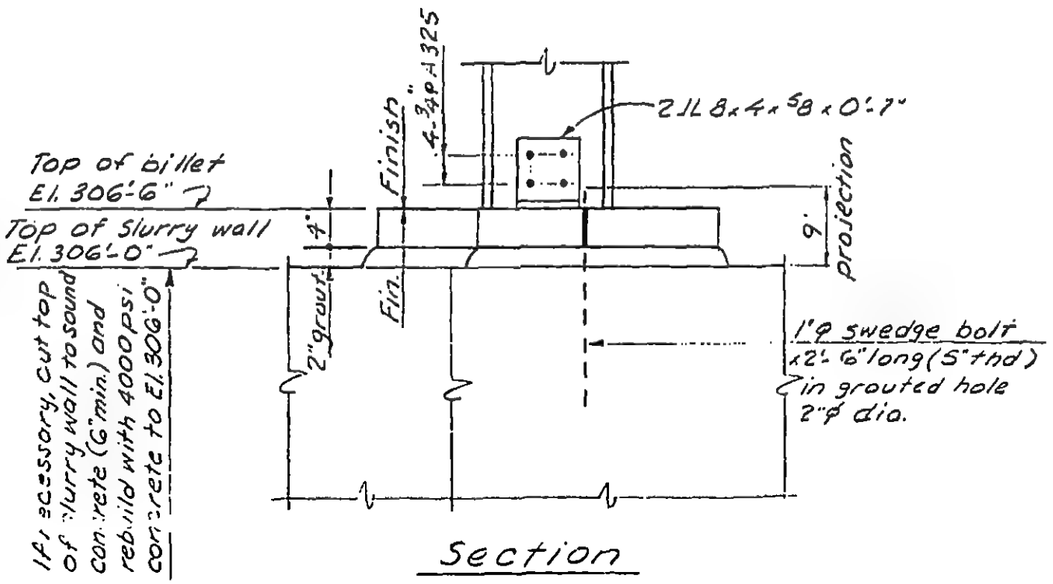

Section

Notes:
1. Provide proper shims (3"x3") as required to level the billet plate (3 req'd.)
2. All material shown to be A-36 steel.
3. All welds to be E70xx

LICENSED PROFESSIONAL ENGINEER — LESLIE E. ROBERTSON — No. 34360 — UNIVERSITY OF THE STATE OF NEW YORK

DESIGNED

DRAWN A.L. FRANQUI

REVIEWED E.L.

10-JK3-2E

SKILLING, HELLE, CHRISTIANSEN, ROBERTSON — Structural & Civil Engineers

PROJECT THE WORLD TRADE CENTER | TITLE DETAIL OF COLUMN BASE M48-5 | DATE 4-17-69

REVISIONS

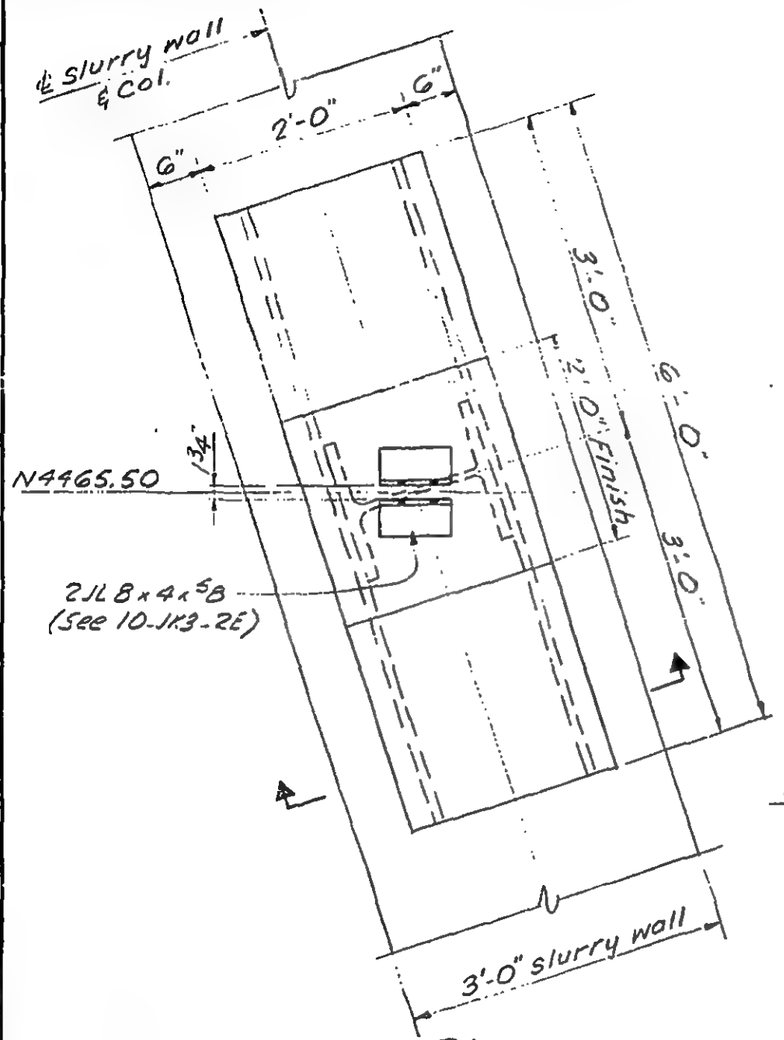

Plan
(Column not shown)

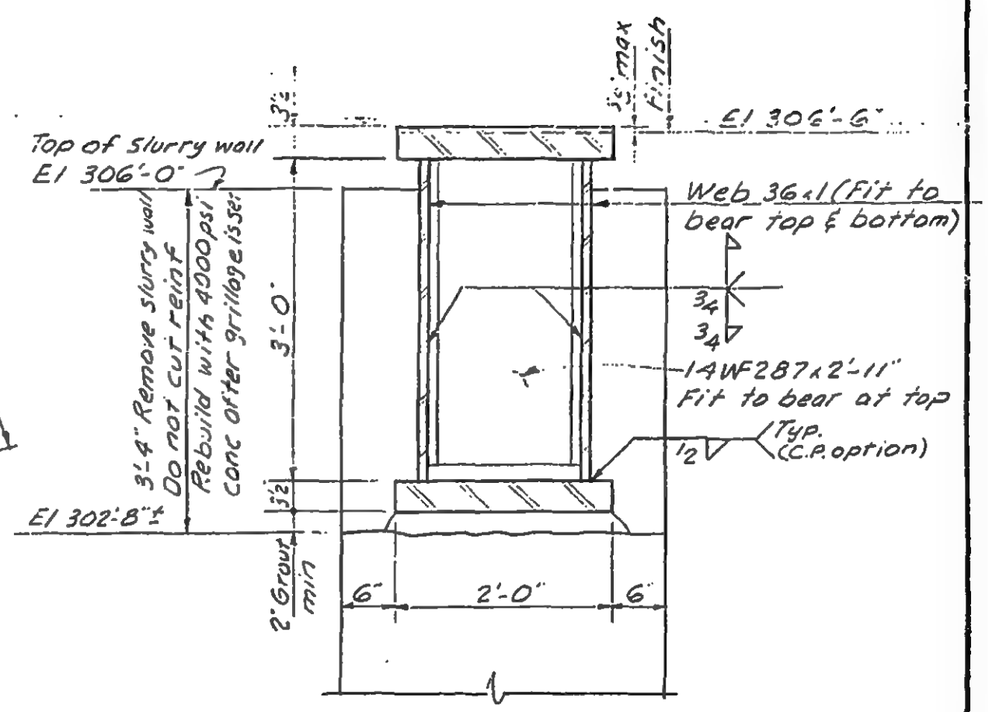

Section

Notes:
1. All material shown to be A-36 steel.
2. All welds to be E70xx.

LICENSED PROFESSIONAL ENGINEER — LESLIE E. ROBERTSON — No 34360 — UNIVERSITY OF THE STATE OF NEW YORK

DRAWN S.C.

REVIEWED E.L.

10-JK3-2F

SKILLING, HELLE, CHRISTIANSEN, ROBERTSON — Structural & Civil Engineers

PROJECT THE WORLD TRADE CENTER | TITLE COLUMN BASE PLATE SCHEDULE AT EL. 310'-0" | DATE 10-15-68

REVISIONS
11-5-68
3-17-69
3-19-69

COLUMN MARK	COLUMN SECTION	DETAIL TYPE	PL 'A' b	PL 'A' c	PL 'A' l	PL 'A' f	PL 'A' *t1	PL 'D' & 'E' t2	PL 'D' & 'E' m	PL 'D' & 'E' n	PL 'D' & 'E' s	H.S. BOLTS J (A-325)	H.S. BOLTS H (A-490)
C3-22	14WF87	II-A		by others				1/2"					
C4-23	14WF87	II-A		by others				1/2					
C5-22	14WF95	II-A		by others				1/2					
C6-18	14WF95	II-A		by others				1/2					
C8-16	14WF111	II-A		by others				1/2					
C8-17	14WF95	II-A		by others				1/2					
C10-5	14WF158	I-A		by others				1/2					
C10-7	14WF142	I	21	20			2	3/4	5 1/4	8 1/2	13		
C10-8	14WF127	I	20	20			2	1/2	5	8 1/2	13		
C11-10	14WF136	II-A		by others				1/2					
C12-4	14WF111	IV	20	20			2	1/2	7 1/2	3 1/2	10 1/2		
C12-5	14WF111	IV	20	20			2	1/2	7 1/2	3 1/2	10 1/2		
C12-6	14WF111	VII	20	20	10"		2	1	7 1/2	3 1/2	10	6-7/8" ϕ	28-7/8" ϕ
C12-7	14WF95	V	20	19			2	1/2	5	8 1/4	12 3/4		
J14-8	14WF193	IV	21	21			2	1/2	8 1/4	3 3/4	11 1/2		
J14-9	14WF264	VI	22	22			2	1/2	5 1/2	9	14		
J14-10	14WF202	IV	21	21			2	1/2	8 1/4	3 3/4	11 1/2		
J14-11	14WF202	VI	21	21			2	1/2	5 1/4	8 1/2	13 1/4		
J14-12	14WF264	VI	22	22			2	1/2	5 1/2	9	14		
J16-1	14WF264	VI	22	22			2	1/2	5 1/2	9	14		
J16-2	14WF202	IV	21	21			2	1/2	8 1/4	3 3/4	11 1/2		
J16-3	14WF202	VI	21	21			2	1/2	5 1/4	8 1/2	13 1/4		
J16-4	14WF264	VI	22	22			2	1/2	5 1/2	9	14		
J16-51	14WF87	VI	20	19			2	1/2	5	8	12 1/2		
J2-23B	14WF78	II	13	15			2	1/2					

Notes:
1. All plates to have Fy = 42 ksi.
2. All welds to be E 70XX.
3. See Dwgs. 10-JK3-4 thru 10 for type & details.
4. Columns with "C" designation, by others.
5. * — In no case shall t_1 be less than thickness of beam cover PL, if any.

LICENSED PROFESSIONAL ENGINEER — LESLIE E. ROBERTSON — No. 34369 — UNIVERSITY OF THE STATE OF NEW YORK

DESIGNED
DRAWN S.C.
REVIEWED E.L.

10-JK3-3

SKILLING, HELLE, CHRISTIANSEN, ROBERTSON — Structural & Civil Engineers

PROJECT THE WORLD TRADE CENTER | TITLE COLUMN BASE PLATE SCHEDULE AT EL. 310'-0" | DATE 10-15-68

REVISIONS
11-5-68
3-17-69
3-19-69

COLUMN MARK	COLUMN SECTION	DETAIL TYPE	Æ 'A' b	c	ℓ	f	*t_1	Æ 'D' & 'E' t_2	m	n	s	H.S. BOLTS J (A-325)	H (A-490)
J 18-1	14 WF 228	IV	22"	22"			2"	½"	8¼"	3¾"	11½"		
J 18-2	14 WF 84	VI	17	19			2	½	5	8	12½		
J 18-3	14 WF 84	IV	19	17			2	½	8¼	3¾	11½		
J 18-4	14 WF 228	IV	22	22			2	½	8¼	3¾	11½		
J 18-51	14 WF 87	VI	20	19			2	½	5	8	12½		
J 20-1	14 WF 228	IV	22	22			2	½	8¼	3¾	11½		
J 20-2	14 WF 87	VI	20	19			2	½	5	8	12½		
J 20-3	14 WF 87	VII	26	19	10"	10"	2	1	6¼	7½	12¾	6 - ⅞"ϕ	28 - ⅞"ϕ
J 20-4	14 WF 228	VII	23	22	11	9	2	1	7¾	4½	11¼	6 - ⅞"ϕ	28 - ⅞"ϕ
J 20-51	14 WF 87	VI	20	19			2	½	5	8	12½		
J 22-1	14 WF 87	V	20	19			2	½	5	8	12½		
J 22-2	14 WF 228	VI	22	22	cut corner of Æ at girder J6N		2⅛	½	5½	9	14		
E 22-3	14WF 95	V	19	20			2	½	7½	3½	10½		
J 23-5	14 WF 87	V	19	20			2	½	7½	3½	10½		
J 23-6	14 WF 228	VII A	22	22	11	6	2	1	7½	8½	15	6 - ¾"ϕ	14 - ⅞"ϕ
J 23-7	14 WF 111	VII A	20	20	10	6	2	1	7½	3½	10	6 - ¾"ϕ	14 - ⅞"ϕ
K 26-1	14 WF 202	VI	21	21			2	½	5¼	8½	13¼		
K 26-2	14 WF 264	VI	22	22			2	½	5½	9	14		
K 26-3	14 WF 202	VI	21	21			2	½	5¼	8½	13¼		
K 26-4	14 WF 202	VI	21	21			2	½	5¼	8½	13¼		
K 26-5	14 WF 264	VII	28	22	11	11	2	1	8	8	15	6 - ⅞"ϕ	28 - ⅞"ϕ
K 26-6	14 WF 202	VI	21	21			2	½	5¼	8½	13¼		
K 26-7	14WF 314	VI	22	23			2	½	5	9	13½		
K 28-1	14 WF 202	III	17	17			2	½					
K 28-2	14 WF 264	IV	22	22			2	½	8¼	3¾	11½		
K 28-3	14 WF 202	VI	21	21			2	½	5¼	8½	13¼		
K 28-4	14 WF 202	VI	21	21			2	½	5¼	8½	13¼		
K 28-5	14 WF 264	VI	22	22			2	½	5½	9	14		
K 28-6	14 WF 202	V	21	21			2	½	5¼	8½	13¼		

Notes:
1. All plates to have Fy = 42 ksi.
2. All welds to be E 70XX.
3. See Dwgs. 10-JK3-4 thru 10 for type & details.
4. Columns with "E" designation, by others.
5. * — In no case shall t_1 be less than thickness of beam cover Æ, if any.

LICENSED PROFESSIONAL ENGINEER — LESLIE E. ROBERTSON — No. 34360 — UNIVERSITY OF THE STATE OF NEW YORK

DESIGNED
DRAWN S.C.
REVIEWED E.L.

10-JK3-3A

SKILLING, HELLE, CHRISTIANSEN, ROBERTSON — Structural & Civil Engineers

PROJECT: THE WORLD TRADE CENTER | TITLE: COLUMN BASE PLATE SCHEDULE AT EL. 310'-0" | DATE: 10-15-68

REVISIONS
11-5-68
3-17-69
4-14-70

COLUMN MARK	COLUMN SECTION	DETAIL TYPE	Æ 'A' b	c	l	f	*t_1	Æ 'D' & 'E' t_2	m	n	s	H.S. BOLTS J (A-325)	H (A-490)
K28-7	14 WF 264	IV	22"	22"			2"	½"	8¼"	3¾"	11½"		
K30-1	14 WF 84	II	13	16			2	½					
K30-2	14 WF 228	V	22	22			2	½	5¼	8½	13¼		
K30-3	14 WF 84	IV	19	17			2	½	7	2¾	9¼		
K30-4	14 WF 84	VII A	19	17	9½"	6"	2	1	6¾	5½	11¼	6-¾"ϕ	14-1"ϕ
K30-5	14 WF 228	VI	22	22			2	1	7½	8½	15		
K30-6	14 WF 84	VII A	20	19	8½		2	1	5½	7½	12	6-¾"ϕ	14-⅞"ϕ
K30-7	14 WF 228	IV	22	22			2	½	8¼	3¾	11½		
K33-1	14 WF 87	II	16	15			2	½					
K33-2	14 WF 228	IV	22	22			2	½	8¼	3¾	11½		
K33-3	14 WF 87	VII A	19	20	9½	6	2	1	7½	5	11½	6-¾"ϕ	14-1⅛"ϕ
K33-4	14 WF 87	VII A	26	20	9½	6	2	1	7½	5	11½	6-¾"ϕ	14-1⅛"ϕ
K33-5	14 WF 228	VII A	22	22	11		2	1	5½	8¼	13¼	6-¾"ϕ	14-⅞"ϕ
K33-6	14 WF 87	VII	25	20	9½	9½	2	1	7½	6	12½	6-¾"ϕ	28-1"ϕ
K33-7	14 WF 228	IV	22	22			2	½	8¼	3¾	11½		
K36-1	14 WF 87	II	16	15			2	½					
K36-2	14 WF 228	II	17	17			2	½					
K36-3	14 WF 87	V	20	19			2	½	5	8	12½		
K36-4	14 WF 87	VII	28	19	10	9	2	1	5½	7½	12	6-1"ϕ	28-⅞"ϕ
K36-5	14 WF 228	IV	22	22			2	½	8¼	3¾	11½		
K36-6	14 WF 87	VII A	24½	20	9¾	6	2	1	6	7½	12½	6-¾"ϕ	14-1"ϕ
K36-7	14 WF 228	VII	32	22	11	11	2	1	7¾	4½	11¼	6-¾"ϕ	28-⅞"ϕ
M36-8	14 WF 127	V	19½	19½			2	½	5	8	12½		
K39-1	14 WF 202	II	18	17			2	½					
K39-2	14 WF 264	I	18	17			2	½					
K39-3	14 WF 202	V	21	21			2	½	8	3½	10½		
K39-4	14 WF 202	VI	21	21			2	½	5¼	8½	13¼		
K39-5	14 WF 264	VI	22	22			2	½	5½	9	14		
K39-6	14 WF 202	V	21	21			2	½	8	3½	10½		
K39-7	14 WF 264	VI	22	22			2	½	5½	9	14		

Notes:
1. All plates to have Fy = 42 ksi.
2. All welds to be E 70XX.
3. See Dwgs. 10-JK3-4 thru 10 for type & details.
4. Columns with "M" designation, by others.
5. * — In no case shall t_1 be less than thickness of beam cover Pl, if any.

LICENSED PROFESSIONAL ENGINEER — LESLIE E. ROBERTSON — No. 34360 — UNIVERSITY OF THE STATE OF NEW YORK

DESIGNED
DRAWN S.C.
REVISED E.L.

10-JK3-3B

SKILLING, HELLE, CHRISTIANSEN, ROBERTSON — Structural & Civil Engineers

PROJECT: THE WORLD TRADE CENTER | TITLE: COLUMN BASE PLATE SCHEDULE AT EL. 310'-0" | DATE: 11-5-68.

REVISIONS
3-17-69
3-21-69

COLUMN MARK	COLUMN SECTION	DETAIL TYPE	℄ 'A' b	℄ 'A' c	℄ 'A' ℓ	℄ 'A' f	℄ 'A' *t_1	℄ 'D' & 'E' t_2	℄ 'D' & 'E' m	℄ 'D' & 'E' n	℄ 'D' & 'E' s	H.S. BOLTS J (A-325)	H.S. BOLTS H (A-490)
M39-8	14WF127	I	19½"	19½"			2"	½"	5"	8"	12½"		
K53-8	14WF74	II	11"	15"			2"	½"					
K55-7	14WF74	II	11"	15"			2"	½"					
K57-7	14WF74	II	11"	15"			2"	½"					

Notes:

1. All plates to have Fy = 42 ksi.
2. All welds to be E 70XX.
3. See Dwgs. 10-JK3-4 thru 10 for type & details.
4. Columns with "M" designation, by others.
5. * — In no case shall t_1 be less than thickness of beam cover ℄, if any.

LESLIE E. ROBERTSON — LICENSED PROFESSIONAL ENGINEER — No. 34370 — UNIVERSITY OF THE STATE OF NEW YORK

DESIGNED
DRAWN S.C.
REVIEWED E.L.

10-JK3-3C.

SKILLING, HELLE, CHRISTIANSEN, ROBERTSON — Structural & Civil Engineers

PROJECT: THE WORLD TRADE CENTER | TITLE: COLUMN BASE PLATE DETAIL AT EL. 310'-0" | DATE: 10-15-68

REVISIONS

11-5-68

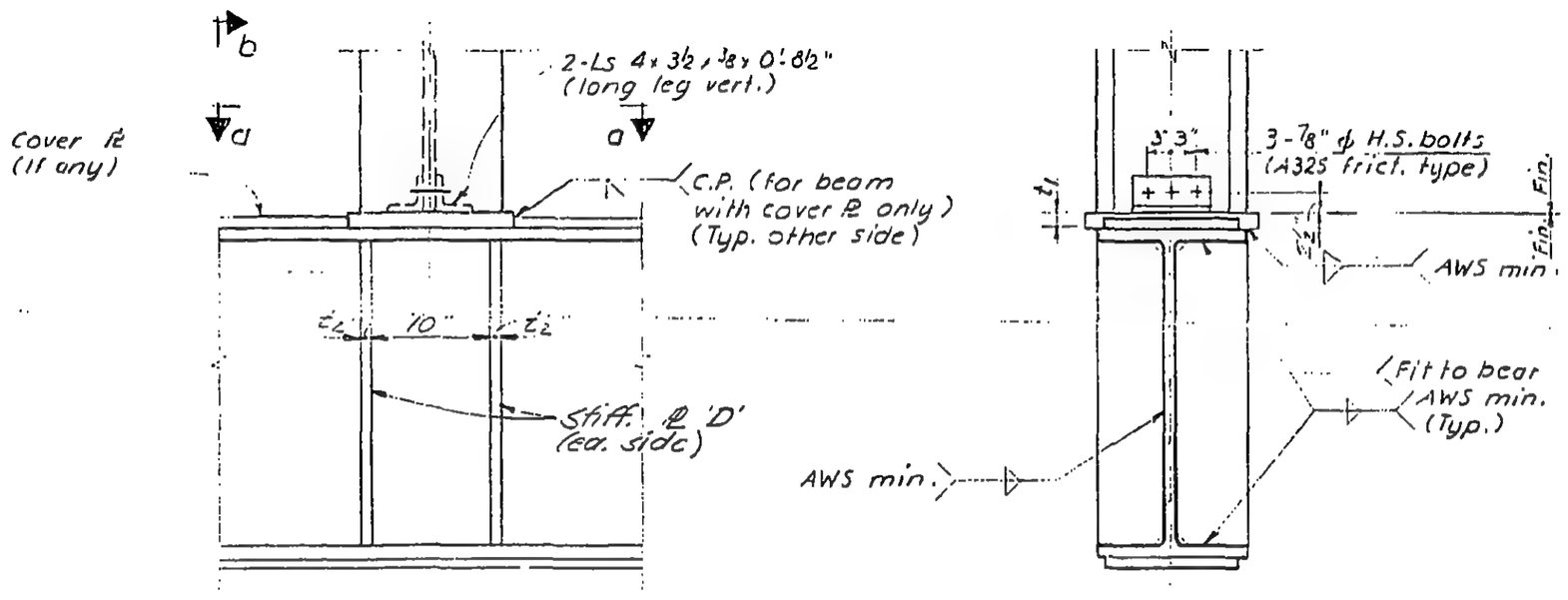

Type I

Section b-b

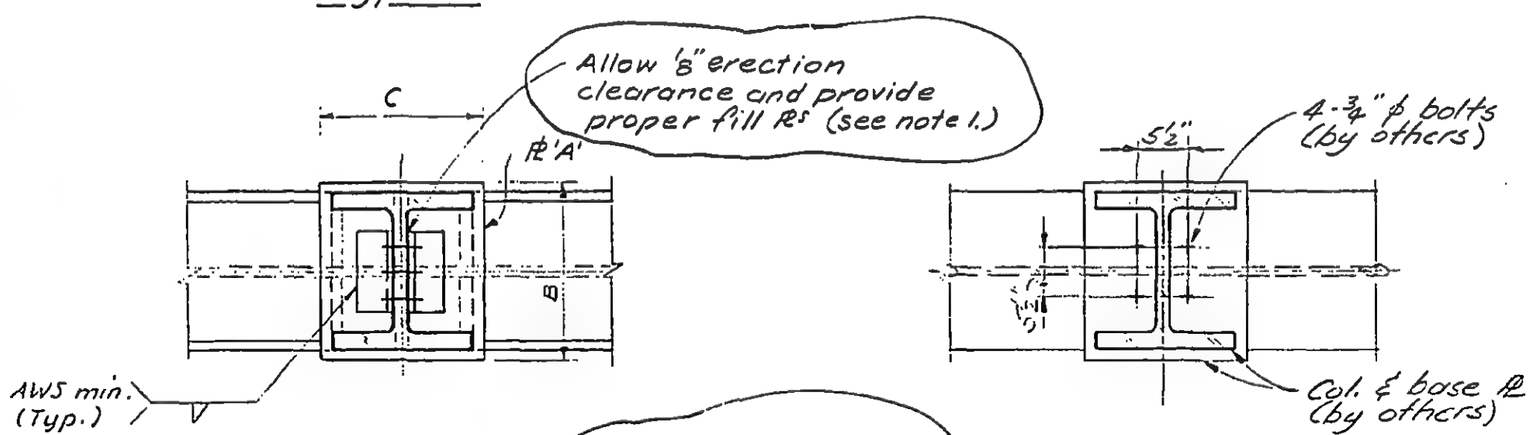

Section a-a

Type I-A

NOTES:
1. For columns with designation other than "J" or "K", fill Pls & bolts to be provided by others.

10-JK3-4

LICENSED PROFESSIONAL ENGINEER — LESLIE E. ROBERTSON — No. 34360 — UNIVERSITY OF THE STATE OF NEW YORK

DRAWN

REVIEWED

SKILLING, HELLE, CHRISTIANSEN, ROBERTSON — Structural & Civil Engineers

PROJECT THE WORLD TRADE CENTER | TITLE COLUMN BASE PLATE DETAIL AT EL. 310'-0" | DATE 10-15-68

REVISIONS

11-5-68

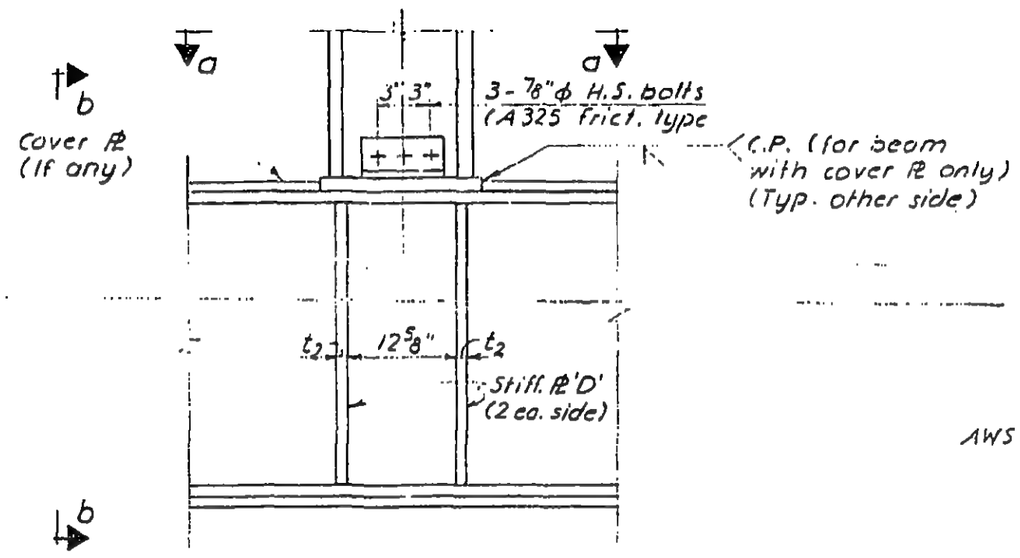

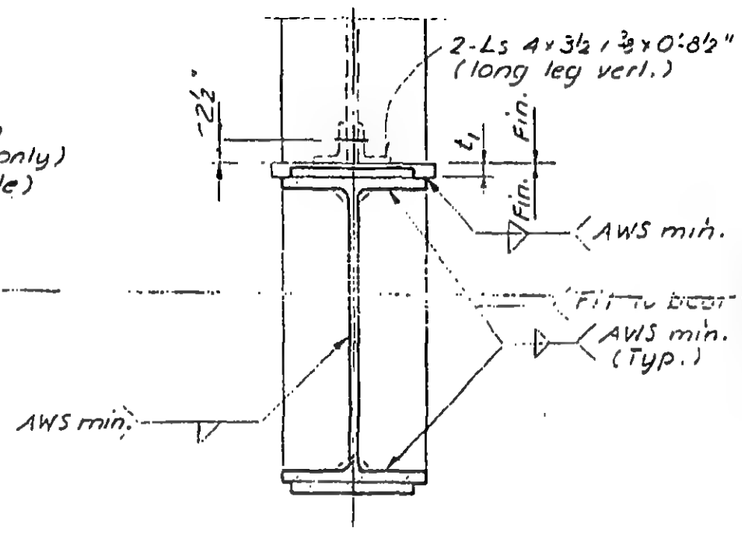

Section b-b

Type II

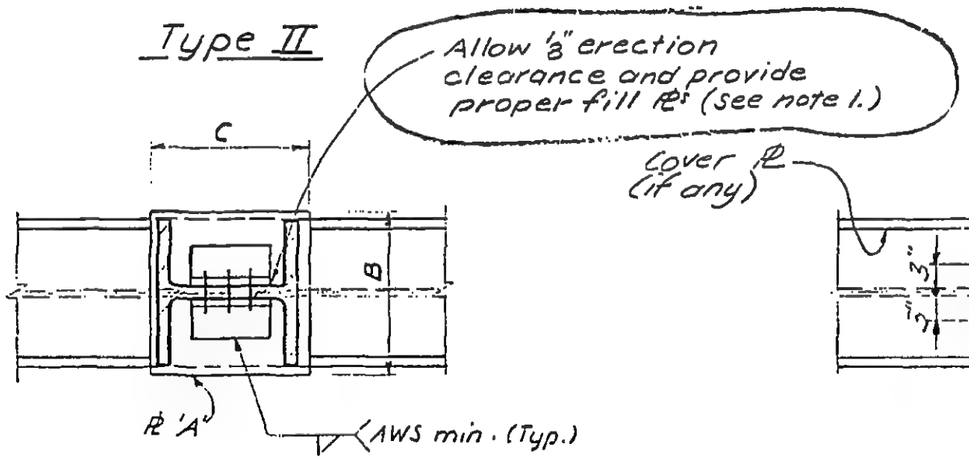

Section a-a

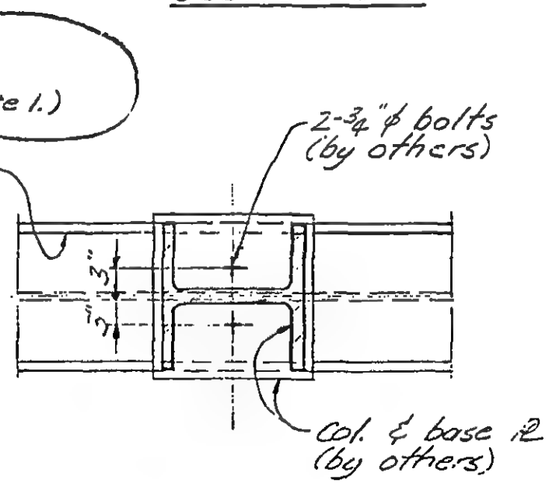

Type II-A

NOTES:

1. For columns with designation other than "J" or "K", fill Pls & bolts to be provided by others.

10-JK3-5

LICENSED PROFESSIONAL ENGINEER — LESLIE E. ROBERTSON — No. 34360 — UNIVERSITY OF THE STATE OF NEW YORK

DESIGNED

DRAWN

REVIEWED

SKILLING, HELLE, CHRISTIANSEN, ROBERTSON — Structural & Civil Engineers

PROJECT THE WORLD TRADE CENTER | TITLE COLUMN BASE PLATE DETAIL AT EL. 310'-0" | DATE 10-15-68

REVISIONS

11-5-68

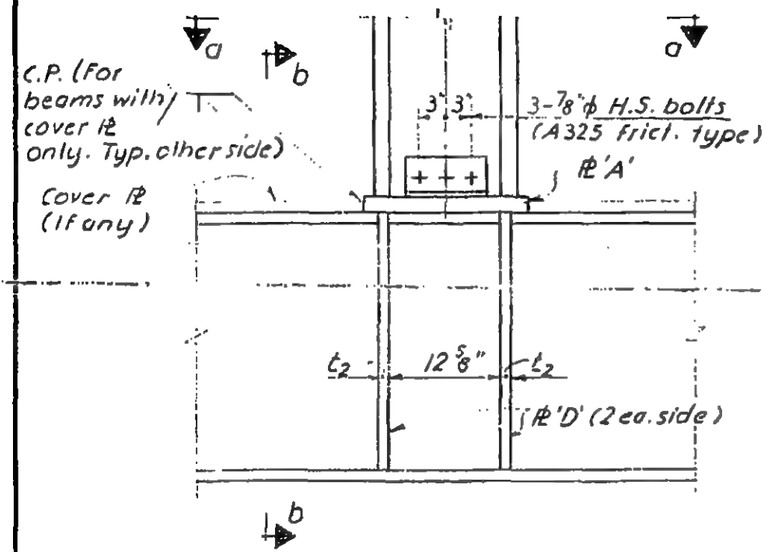

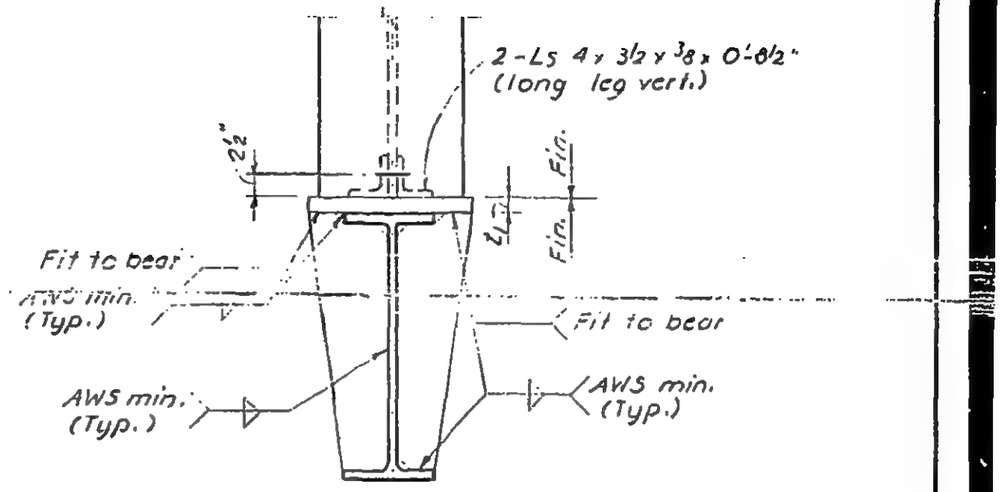

Type III

Section b-b

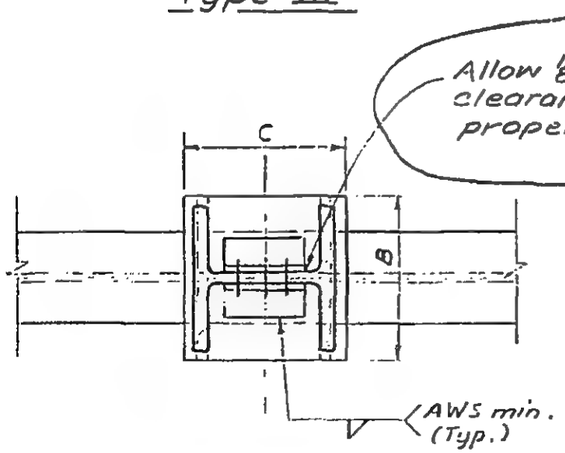

NOTES:
1. For columns with designation other than "J" or "K", fill PLs & bolts to be provided by others.

Section a-a

LESLIE E. ROBERTSON — LICENSED PROFESSIONAL ENGINEER — No. 34360 — UNIVERSITY OF THE STATE OF NEW YORK

DESIGNED

DRAWN

REVIEWED

10-JK3-6

SKILLING, HELLE, CHRISTIANSEN, ROBERTSON — Structural & Civil Engineers

PROJECT THE WORLD TRADE CENTER | TITLE COLUMN BASE PLATE DETAIL AT EL. 310'-0" | DATE 10-15-68

REVISIONS

11-5-68

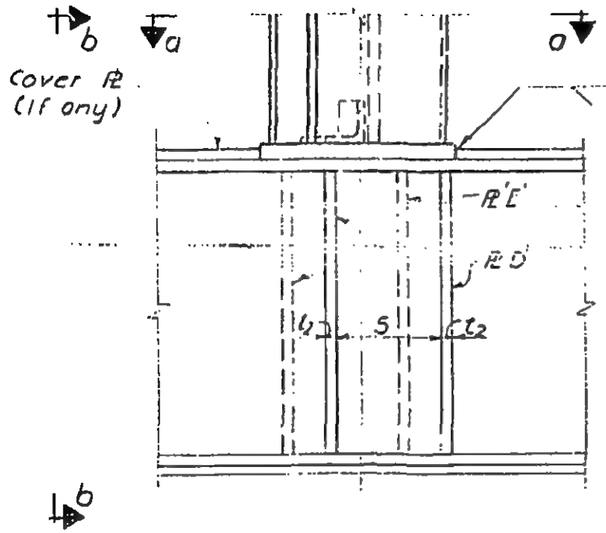

Type IV

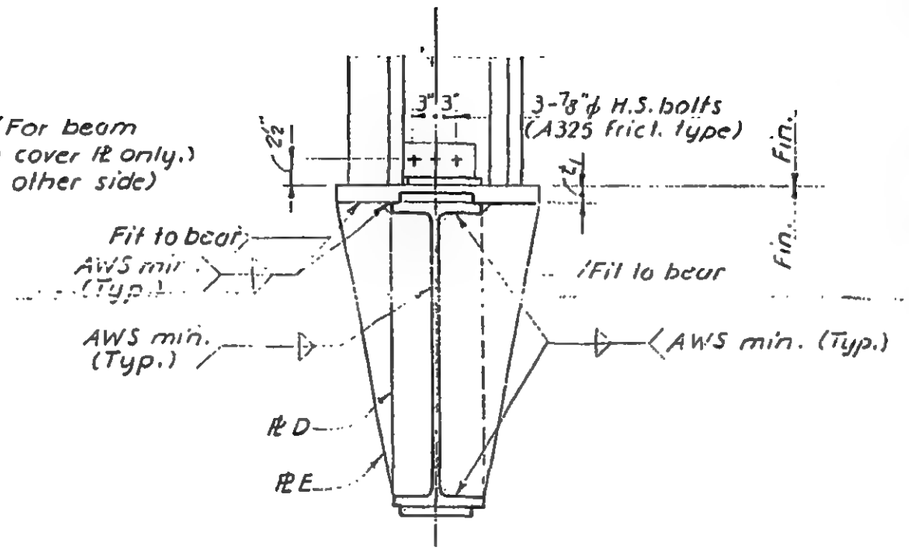

Section b-b

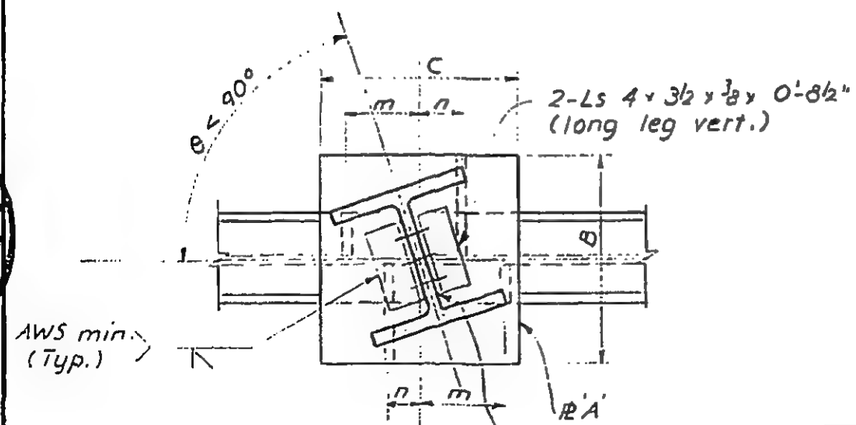

Section a-a

Allow ⅛" erection clearance and provide proper fill Pls (see note 1.)

NOTES:
1. For columns with designation other than "J" or "K", fill Pls & bolts to be provided by others.

LICENSED PROFESSIONAL ENGINEER
LESLIE E. ROBERTSON
No. 34360
UNIVERSITY OF THE STATE OF NEW YORK

DESIGNED

DRAWN

REVIEWED

10-JK3-7

SKILLING, HELLE, CHRISTIANSEN, ROBERTSON — Structural & Civil Engineers

PROJECT THE WORLD TRADE CENTER | TITLE COLUMN BASE PLATE DETAIL AT EL. 310'-0" | DATE 10-15-68

REVISIONS

11-5-68

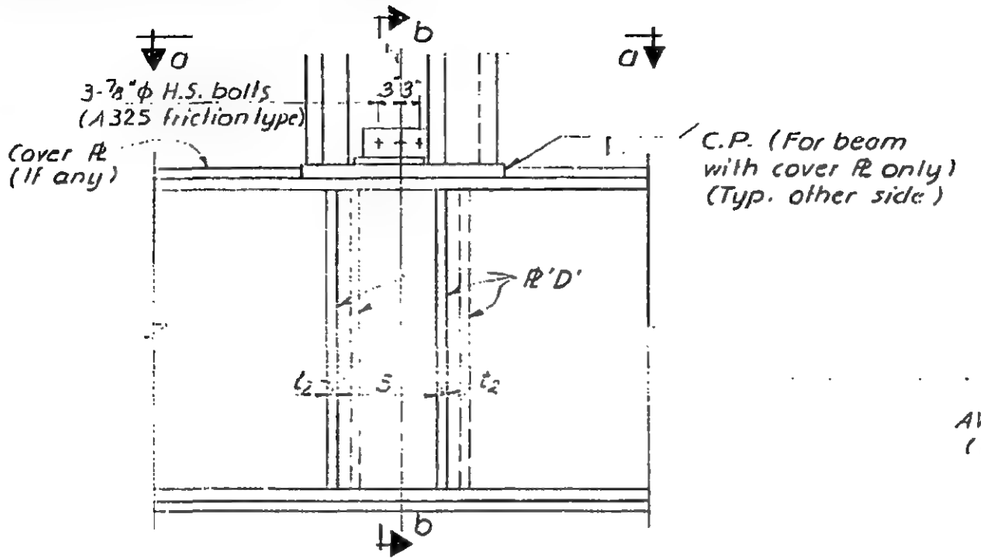

Type V

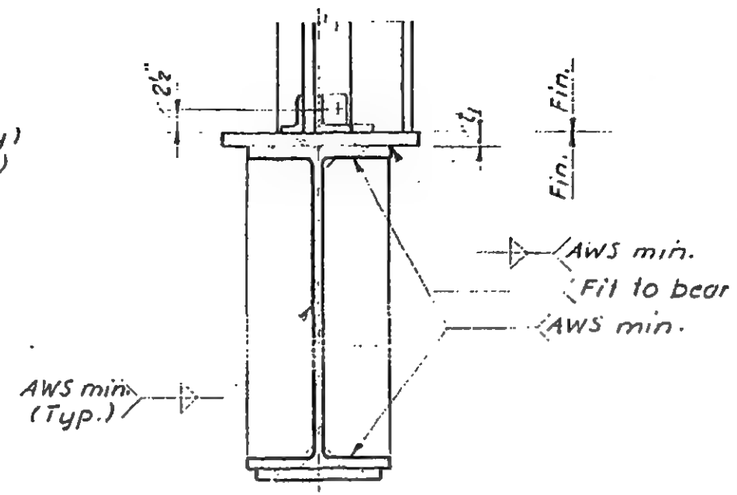

Section b-b

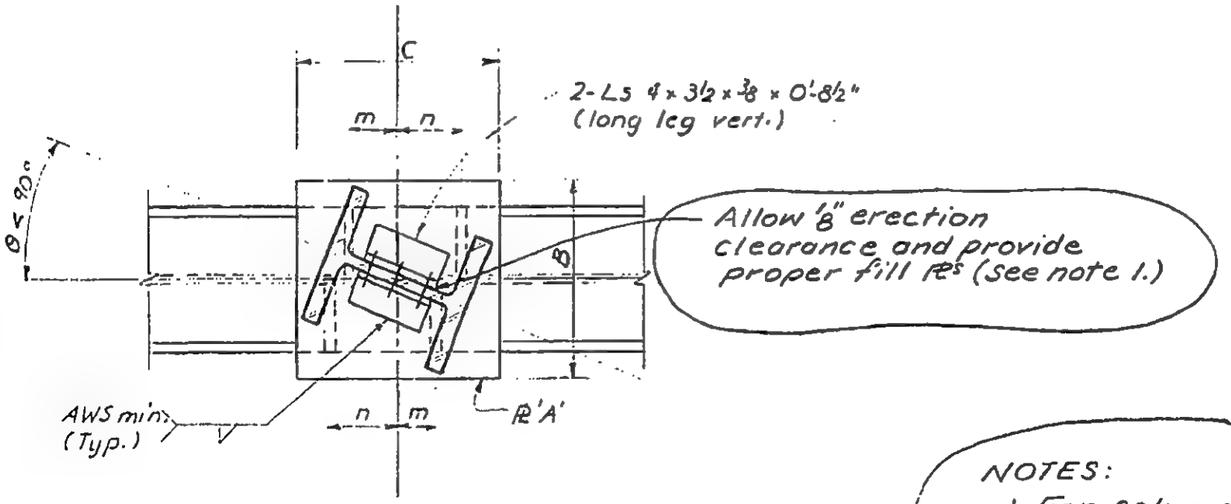

Section a-a

NOTES:
1. For columns with designation other than "J" or "K", fill Pls & bolts to be provided by others.

LICENSED PROFESSIONAL ENGINEER LESLIE E. ROBERTSON No. 34360 UNIVERSITY OF THE STATE

DESIGNED

DRAWN

REVIEWED

10-JK3-8

SKILLING, HELLE, CHRISTIANSEN, ROBERTSON — Structural & Civil Engineers

PROJECT THE WORLD TRADE CENTER | TITLE COLUMN BASE PLATE DETAIL AT EL. 310'-0" | DATE 10-15-68

REVISIONS

11-5-68

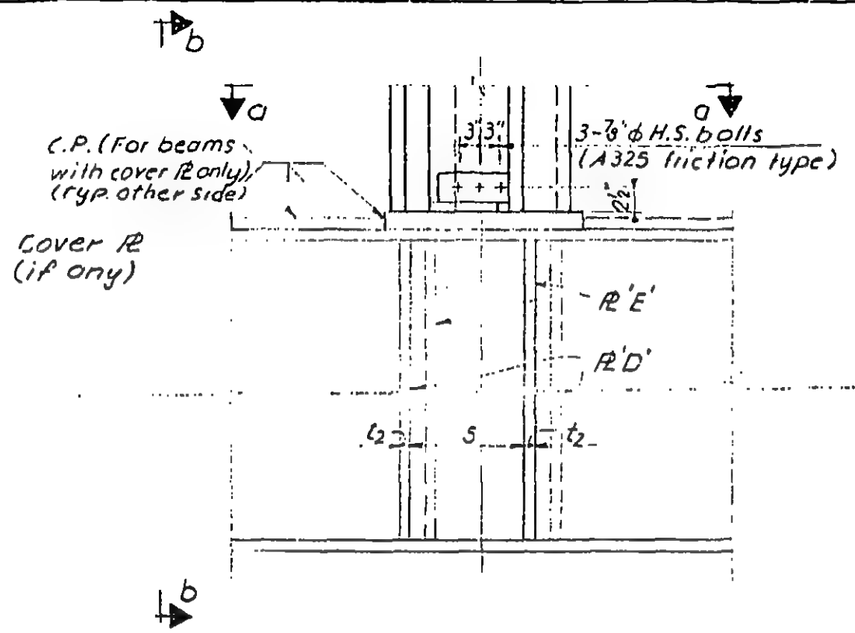

Type VI

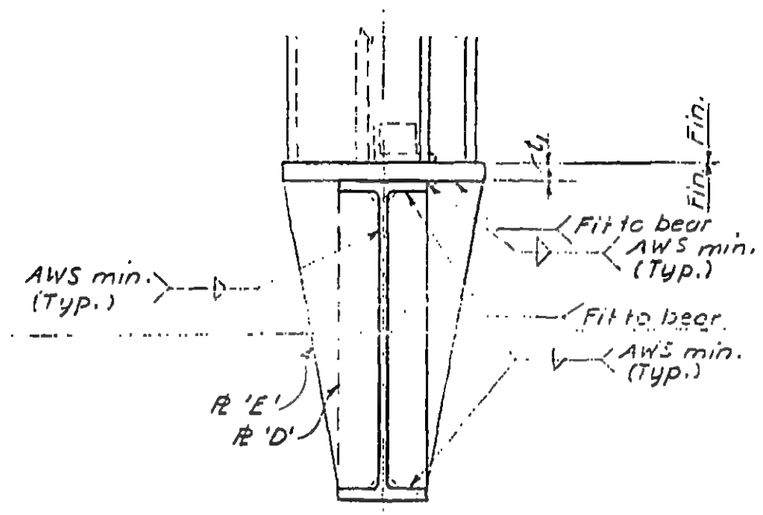

Section b-b

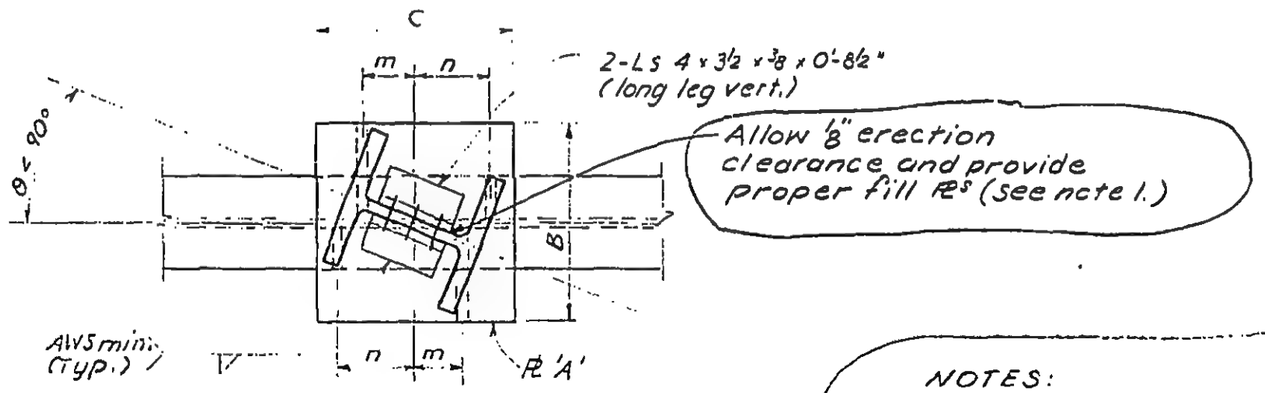

Section a-a

NOTES:

1. For columns with designation other than "J" or "K", fill Pls & bolts to be provided by others.

LICENSED PROFESSIONAL ENGINEER — LESLIE E. ROBERTSON — No. 34360 — UNIVERSITY OF THE STATE OF NEW YORK

DESIGNED

DRAWN

REVIEWED

10-JK3-9

SKILLING, HELLE, CHRISTIANSEN, ROBERTSON — Structural & Civil Engineers

PROJECT: THE WORLD TRADE CENTER | TITLE: COLUMN BASE PLATE DETAIL AT EL. 310'-0" | DATE: 10-15-68

REVISIONS

11-5-68

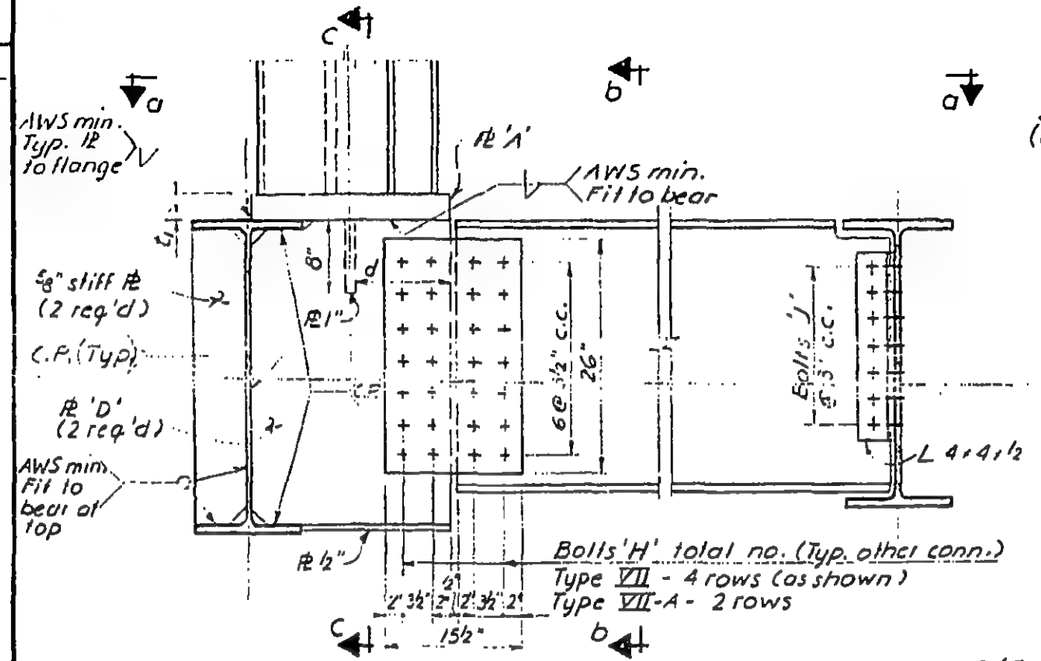

TYPE VII & VII-A

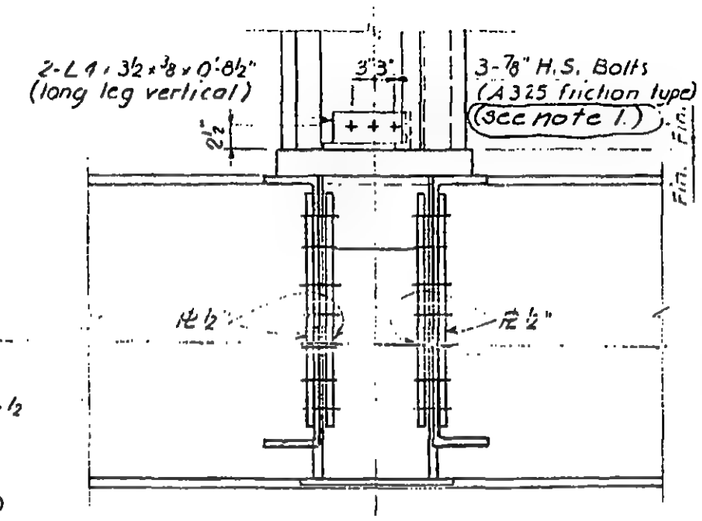

Section b-b

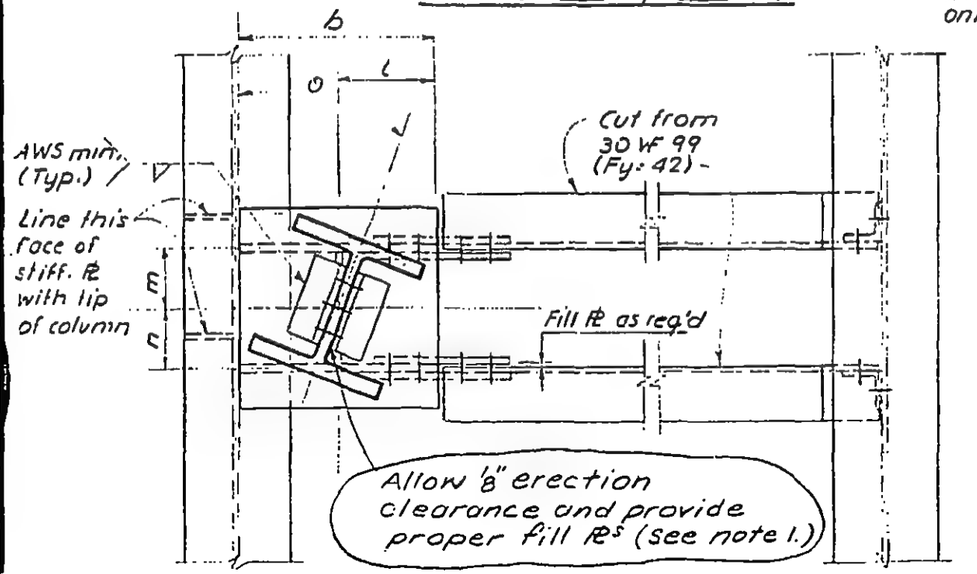

Section a-a

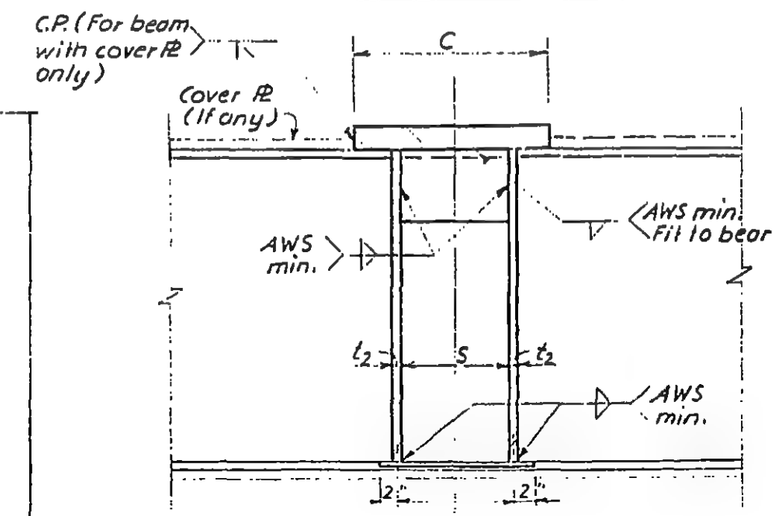

Section c-c

NOTES:
1. For columns with designation other than "J" or "K," these bolts & fill ℄s to be provided by others.

10-JK3-10

LESLIE E. ROBERTSON — LICENSED PROFESSIONAL ENGINEER — NO. 34360 — STATE OF NEW YORK

DRAWN

REVIEWED

SKILLING - HELLE - CHRISTIANSEN - ROBERTSON Structural & Civil Engineers

PROJECT THE WORLD TRADE CENTER | TITLE TYPICAL COLUMN SHEAR-HEAD DETAIL AT EL. 264' | DATE 10-20-67

REVISIONS
11-8-67
11-24-67
2-16-68
6-7-68
6-28-68
1-20-69

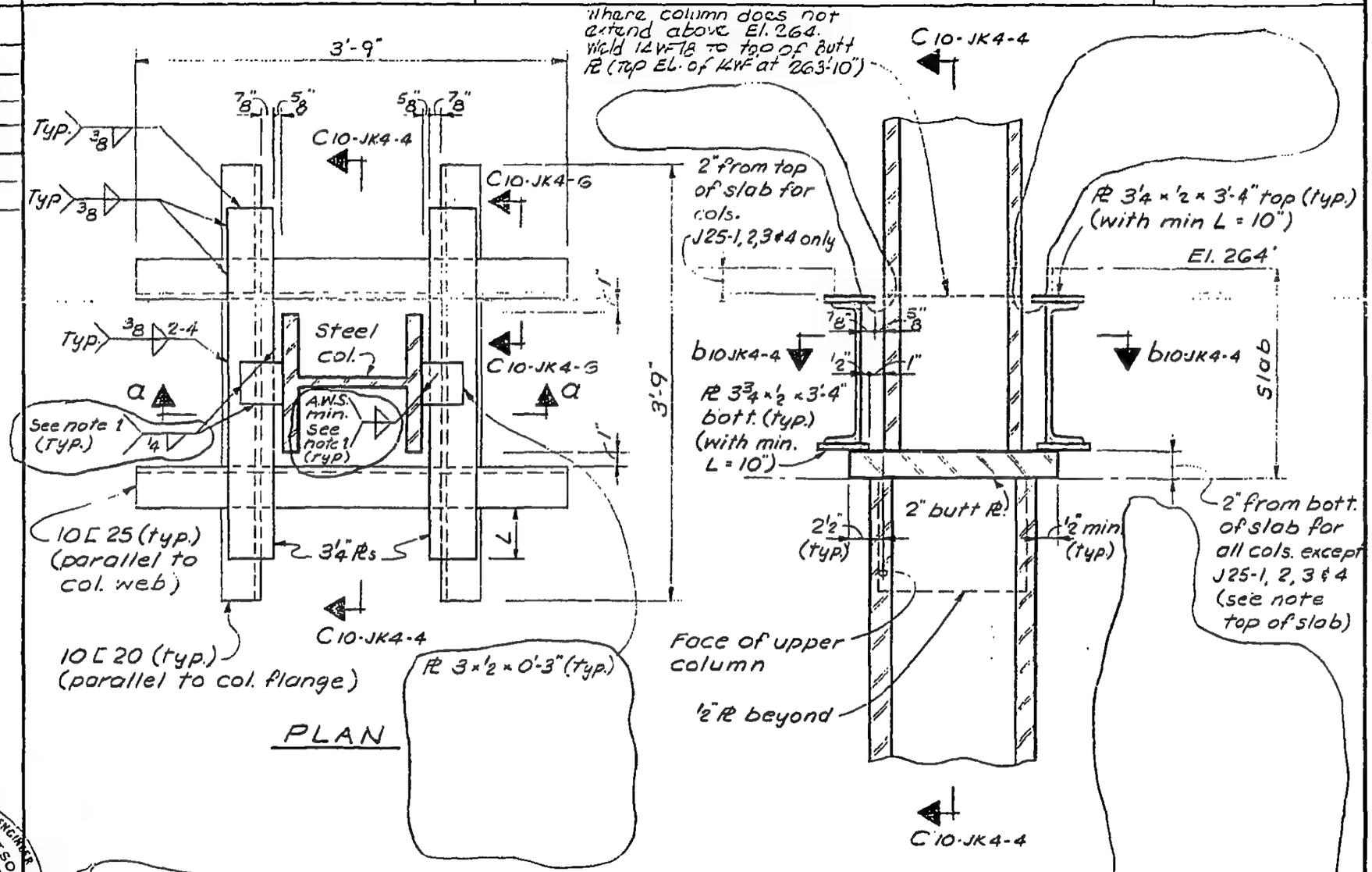

Notes:
1. Use field weld for columns already shipped out.

LICENSED PROFESSIONAL ENGINEER
LESLIE E. ROBERTSON
No. 34360
UNIVERSITY OF THE STATE OF NEW YORK

DRAWN S.C.
REVIEWED E.L.

10-JK4-3

SKILLING - HELLE - CHRISTIANSEN - ROBERTSON Structural & Civil Engineers

PROJECT THE WORLD TRADE CENTER | TITLE TYPICAL COLUMN SHEAR-HEAD DETAIL AT EL. 264' | DATE 10-20-67

REVISIONS
11-24-67
1-20-69

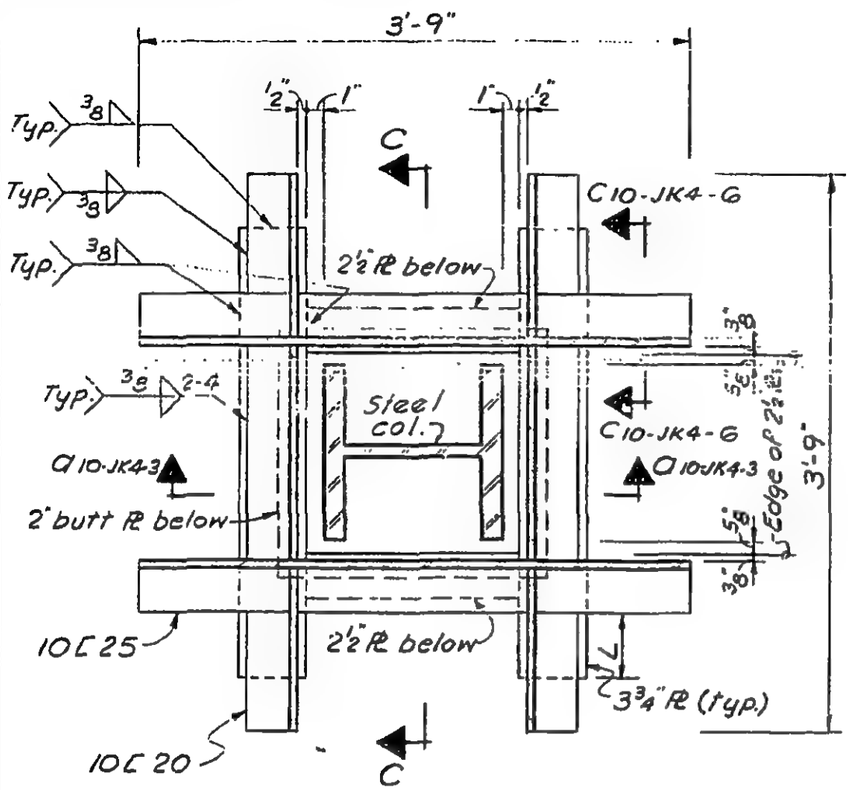

SECTION b-b

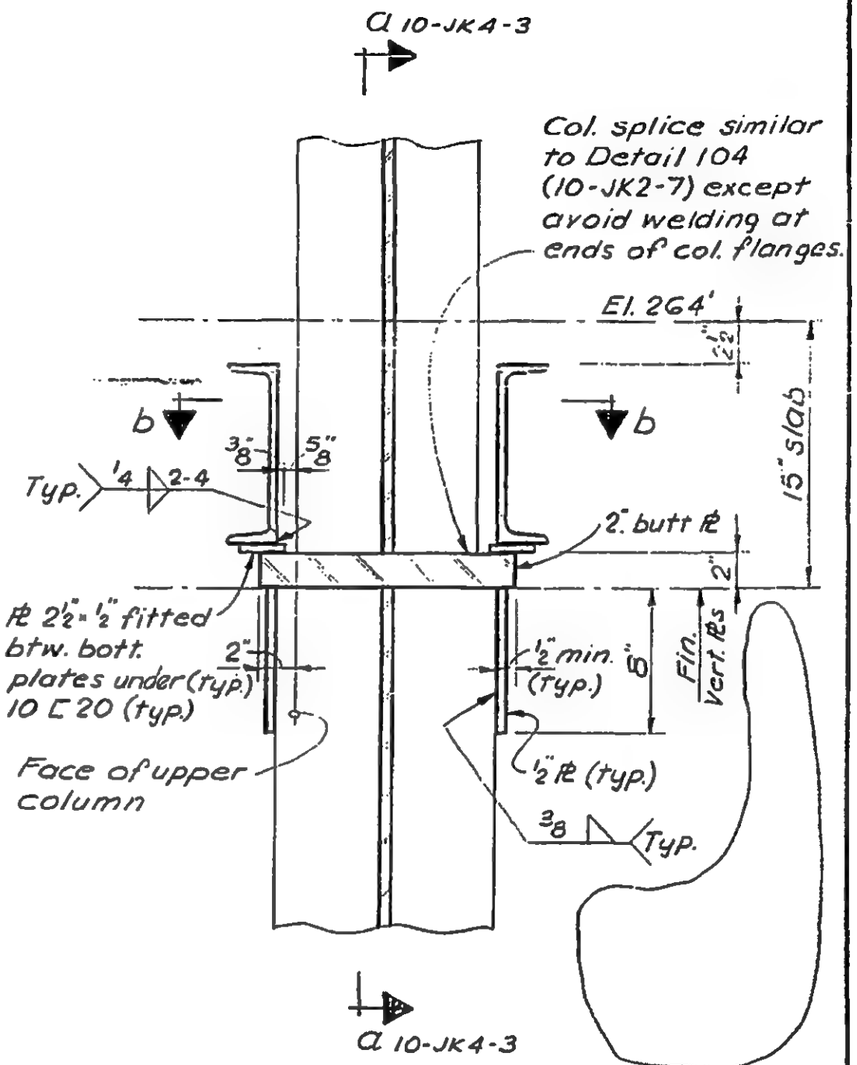

SECTION c-c

LICENSED PROFESSIONAL ENGINEER
LESLIE E. ROBERTSON
No. 34360
UNIVERSITY OF THE STATE OF NEW YORK

DRAWN
S.C.

REVIEWED
E.L.

10-JK4-4

SKILLING - HELLE - CHRISTIANSEN - ROBERTSON Structural & Civil Engineers

PROJECT THE WORLD TRADE CENTER | TITLE COLUMN SPLICE DETAIL | DATE 6-28-68

REVISIONS

9-4-68

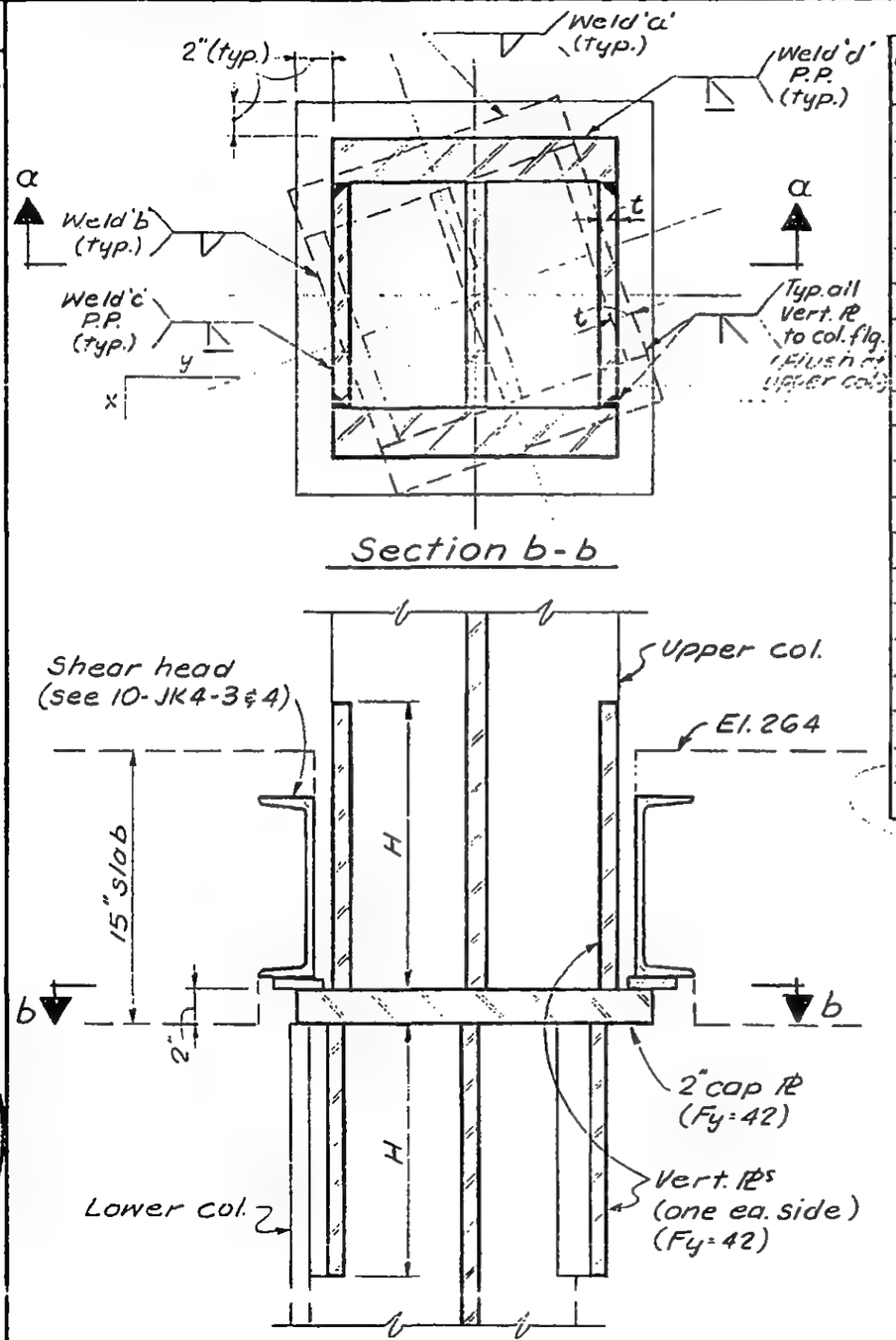

COLUMN No.	SIZE	X	y	VERT. PLS t	VERT. PLS H	WELDS a	WELDS b	WELDS c	WELDS d
J5-15	14WF158	1.0	3.0	1"	0'-10"	3/8"	3/8"	1/2"	1/2"
J5-56	14WF455	1.0	3.0	2"	1'-2"	1/2	3/8	5/8	13/16
J6-15	14WF136	1.0	3.0	1"	0'-10"	3/8	3/8	1/2	1/2
J72-2	14WF665	19.03	57.5	2 1/4"	1'-4"	1/2	3/8	5/8	1
J73-1	14WF455	19.03	57.5	2"	1'-0"	1/2	3/8	5/8	13/16
J73-2	14WF426	19.03	57.5	1 3/4"	0'-10"	1/2	3/8	5/8	13/16
KG1-6	14WF228	20.98	131.21	1"	0'-10"	3/8"	3/8"	1/2"	1/2"

LICENSED PROFESSIONAL ENGINEER
LESLIE E. ROBERTSON
No. 34360
UNIVERSITY OF THE STATE OF NEW YORK

10-JK4-4B

SKILLING - HELLE - CHRISTIANSEN - ROBERTSON Structural & Civil Engineers

PROJECT THE WORLD TRADE CENTER | TITLE COLUMN SHEAR HEAD DETAIL - TYPE V, W, X | DATE 11-24-67

REVISIONS
1-5-68
1-29-68
6-28-68
12-3-68

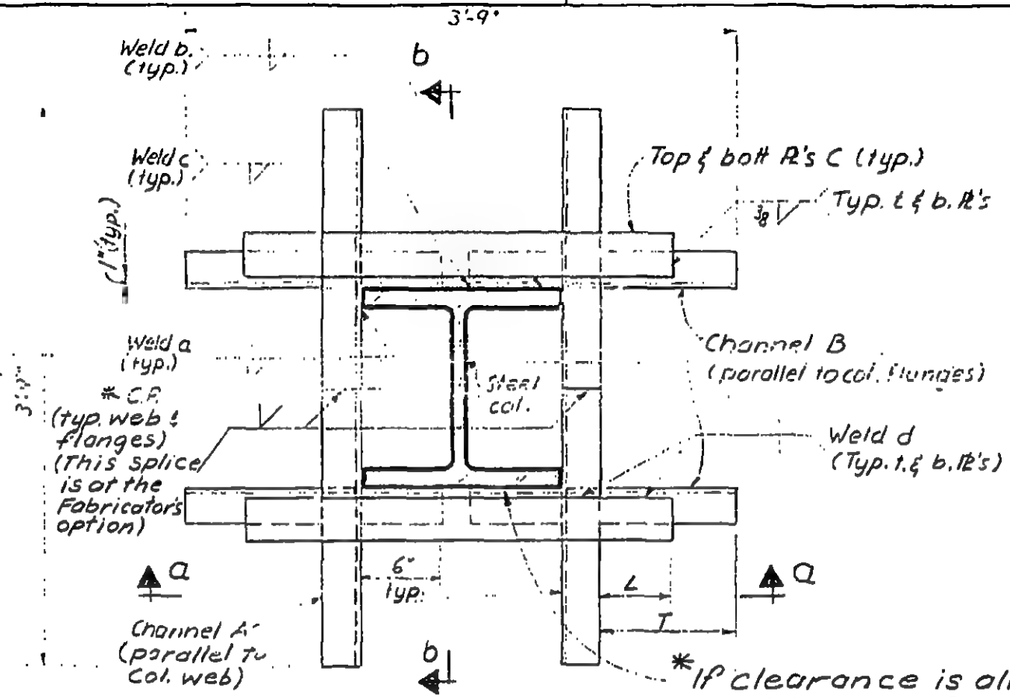

SCHEDULE (All material with Fy - 50 ksi - E70 welding)		SHEAR HEAD TYPE		
		V	W	X
Member Sizes	Channel A	12 x 3½ [32.9	12 x 3½ [32.9	10 x 4 [33.6
	Channel B	12 x 3½ [37	12 x 4 [45	10 x 4 [33.6
	Pl's C	3½ x ½ x 3'-2"	3½ x ½ x 3'-4"	3½ x ½ x 3'-4"
	**min. L	8"	10"	10"
Weld Sizes	a	½	½	½
	b	½	5/8	½
	c	½	5/8	½
	d	3/8	3/8	3/8

** For large columns where L ≥ T, reduce L so that T - L = ½".

* If clearance is allowed between col. & Cs, size of weld a, b & c has to be increased by the dimension of this gap. (max. clearance = ⅛")

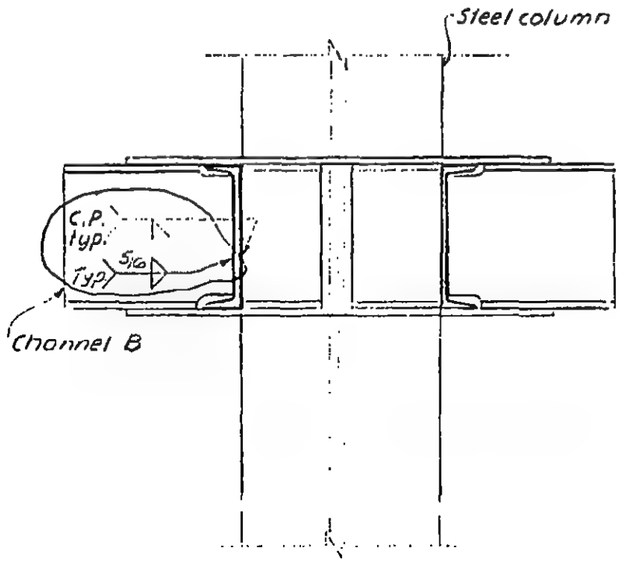

Section a-a

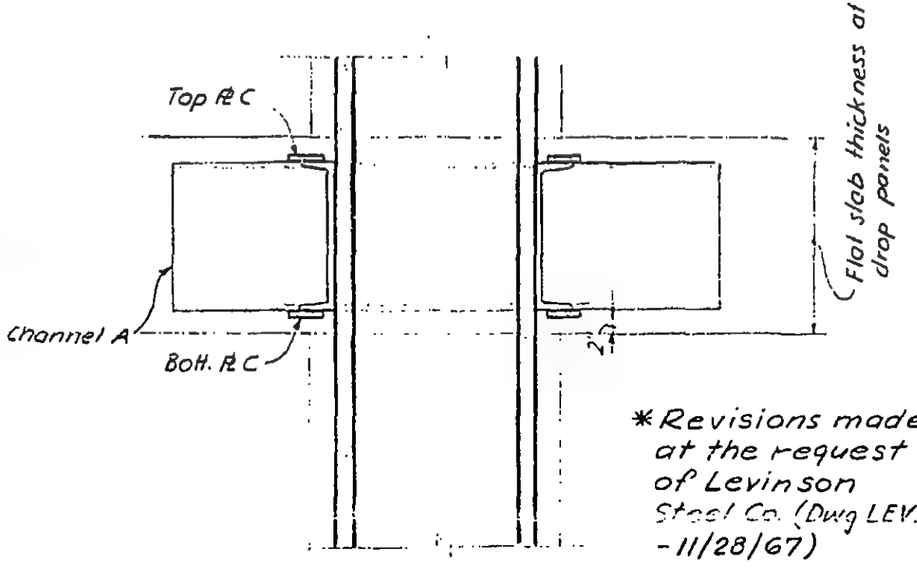

Section b-b

* Revisions made at the request of Levinson Steel Co. (Dwg LEV. #9 - 11/28/67)

10-JK4-5

LICENSED PROFESSIONAL ENGINEER LESLIE E. ROBERTSON No. 34360 UNIVERSITY OF THE STATE OF NEW YORK

WORTHINGTON, SKILLING, HELLE & JACKSON — Civil & Structural Engineers

PROJECT: THE WORLD TRADE CENTER | TITLE: COLUMN SHEAR - HEAD DETAILS - TYPE Y | DATE: 11-24-67

REVISIONS
1-5-68
6-28-68
12-3-68

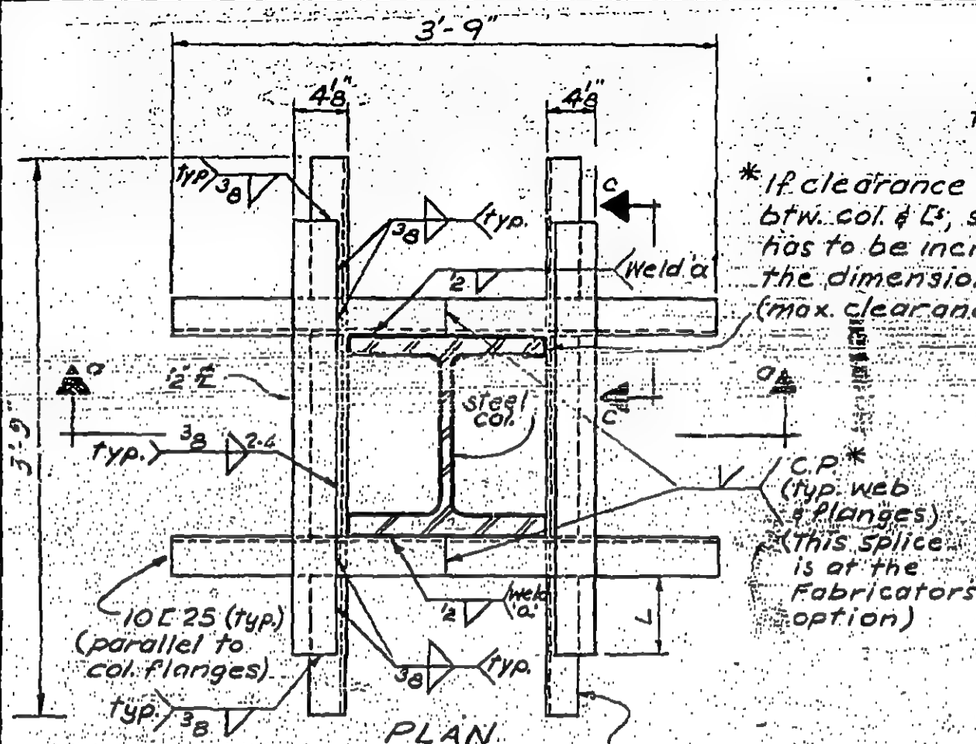

PLAN

Where no column above this floor, top of lower col. shall be 1" below top of C, and weld 'a' shall be on the inside face of C

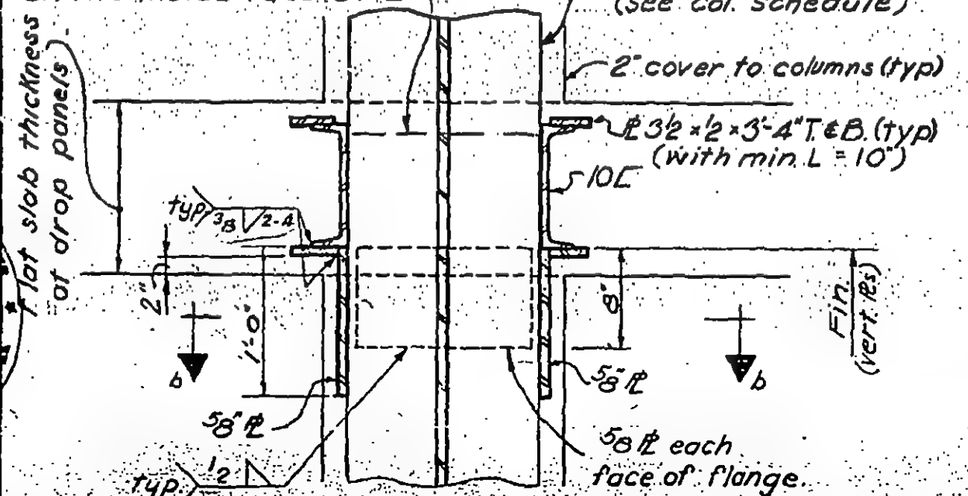

SECTION a-a

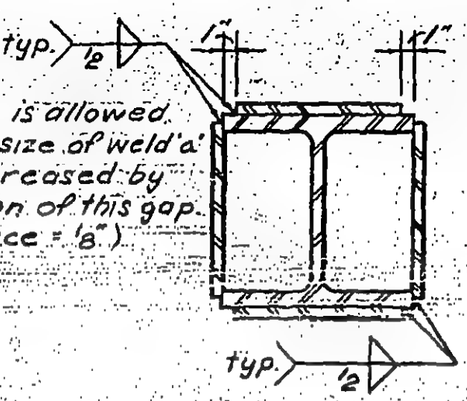

SECTION b-b

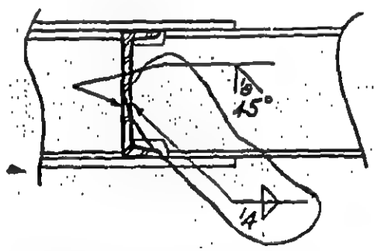

SECTION c-c

* Revisions made at the request of Levinson Steel Co. (Dwg. LEV. #9 - 11/28/67)

LICENSED PROFESSIONAL ENGINEER
LESLIE E. ROBERTSON
No. 34360
UNIVERSITY OF THE STATE OF NEW YORK

10-JK4-6

SKILLING - HELLE - CHRISTIANSEN - ROBERTSON Structural & Civil Engineers

PROJECT THE WORLD TRADE CENTER | TITLE SHEAR HEAD DETAIL | DATE 4-5-68

REVISIONS

12-3-68

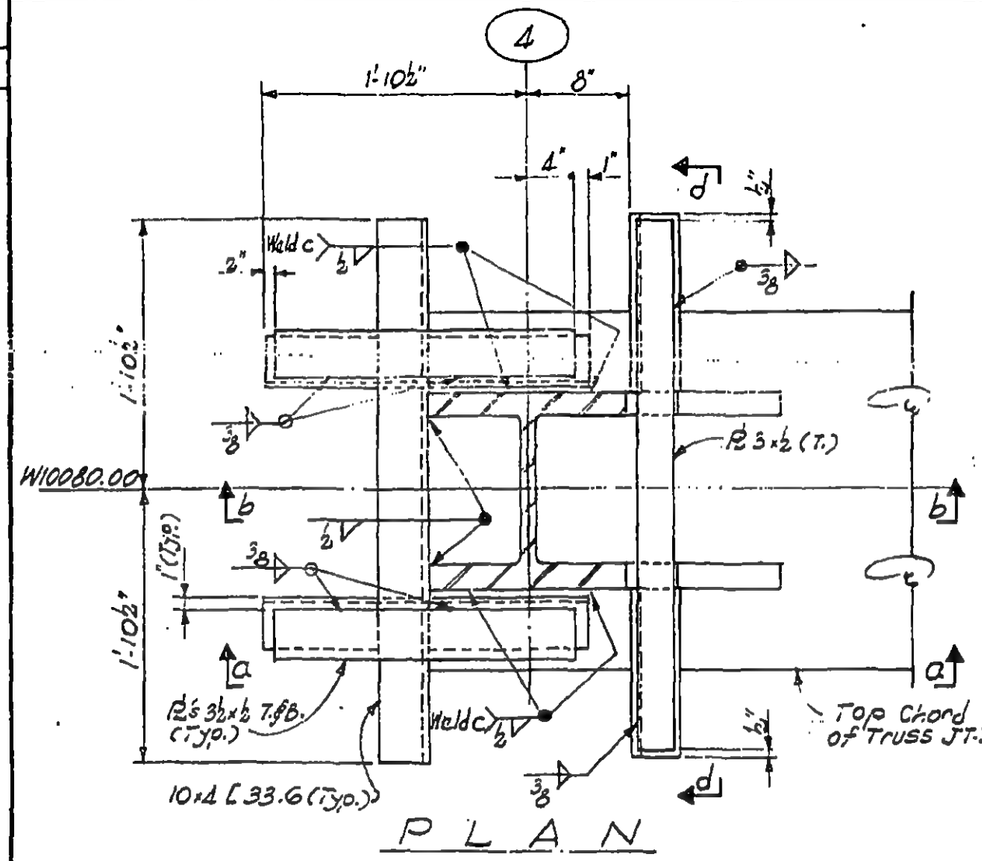

PLAN

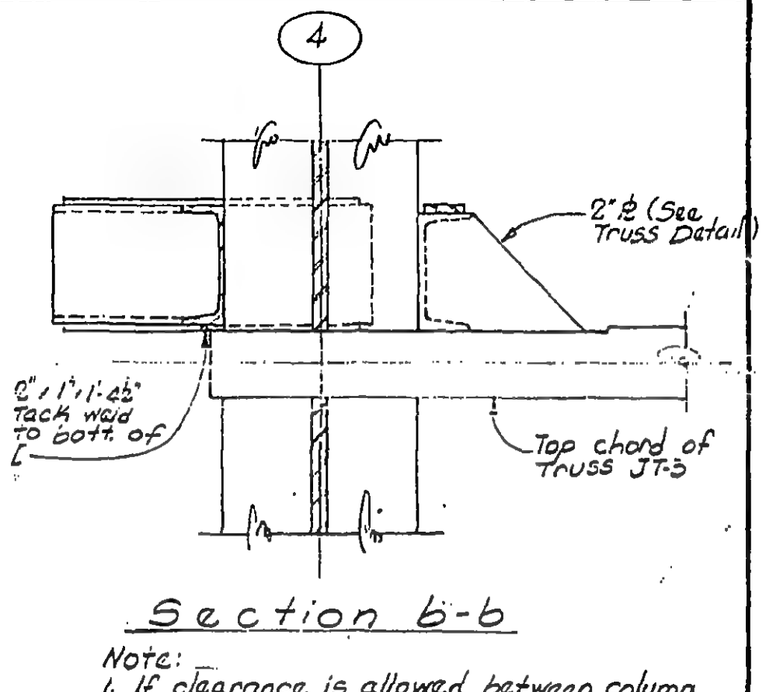

Section b-b

Note:
1. If clearance is allowed between column ℄'s, size of weld c has to be increased by the dimension of this gap (max. clearance = ⅛")
2. All material to be Fy=50 ksi

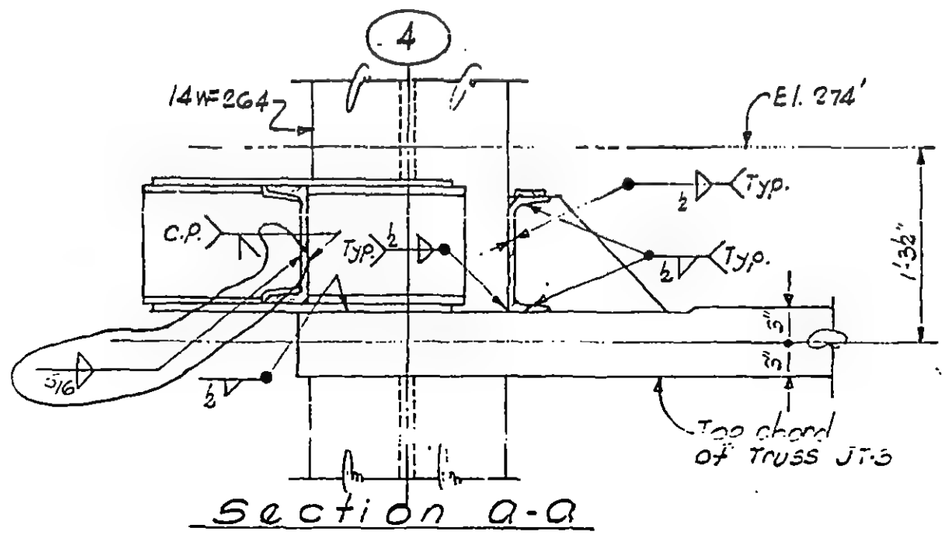

Section a-a

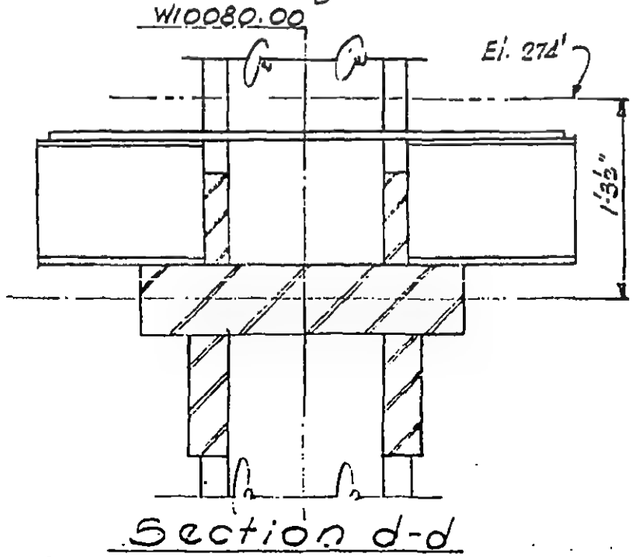

Section d-d

10-JK4-7

LICENSED PROFESSIONAL ENGINEER
LESLIE E. ROBERTSON
No. 34360
REGISTERED IN THE STATE OF NEW YORK

SKILLING - HELLE - CHRISTIANSEN - ROBERTSON Structural & Civil Engineers

PROJECT THE WORLD TRADE CENTER | TITLE SHEAR HEAD DETAIL | DATE 4-5-68

REVISIONS
6-28-68
12-3-68

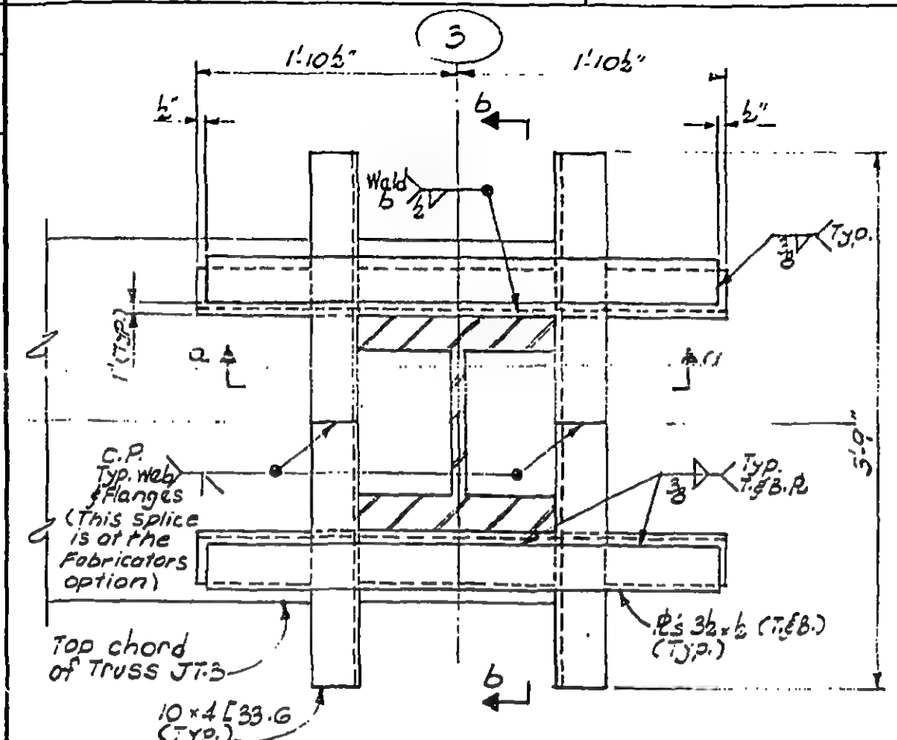

Section b-b

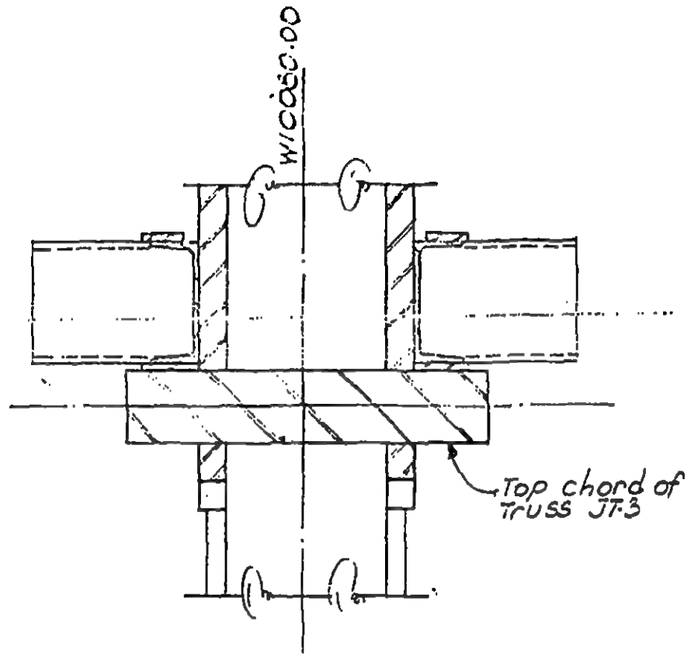

Note:
1. If clearance is allowed between column & channels, size of weld b has to be increased by the dimension of this gap. (max. clearance = ⅛")
2. All material to be Fy = 50 ksi.

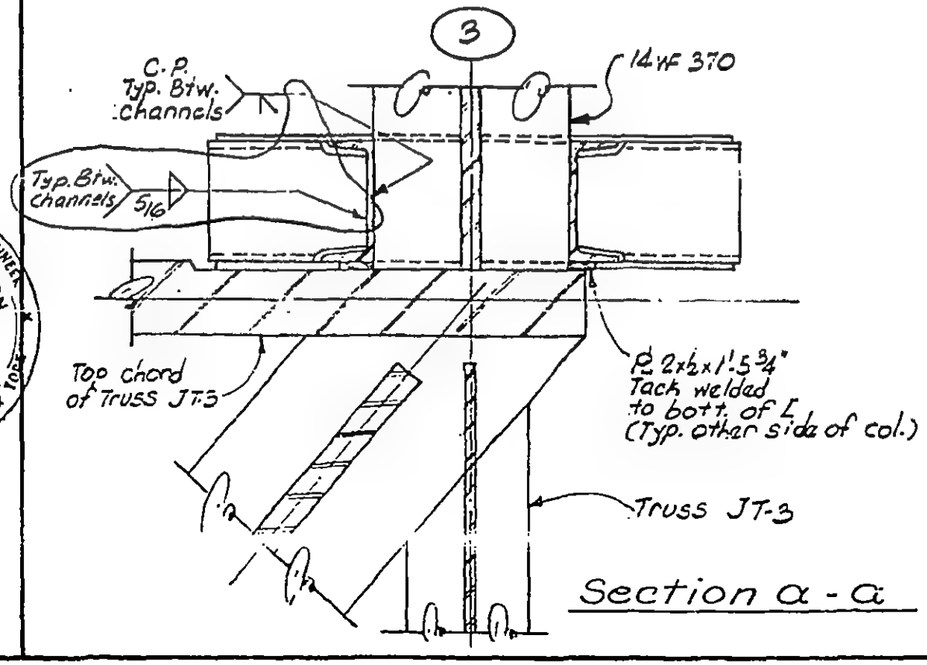

Section a-a

LICENSED PROFESSIONAL ENGINEER
LESLIE E. ROBERTSON
No. 34360
STATE OF NEW YORK

10-JK4-8

SKILLING - HELLE - CHRISTIANSEN - ROBERTSON Structural & Civil Engineers

PROJECT THE WORLD TRADE CENTER | TITLE SHEAR HEAD DETAIL | DATE 4-5-68

REVISIONS
6-28-68
12-3-68
1-20-69

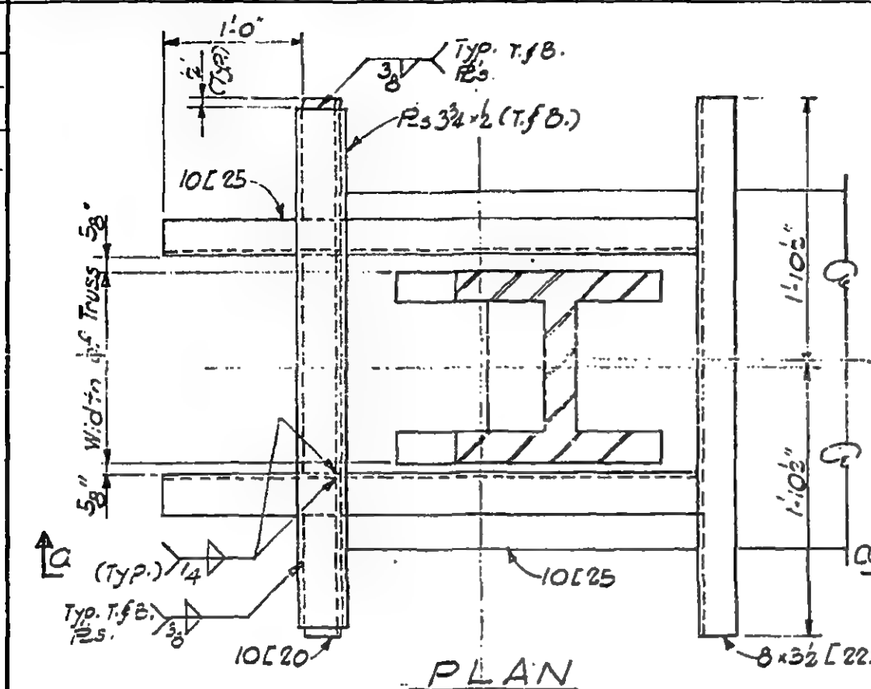

PLAN

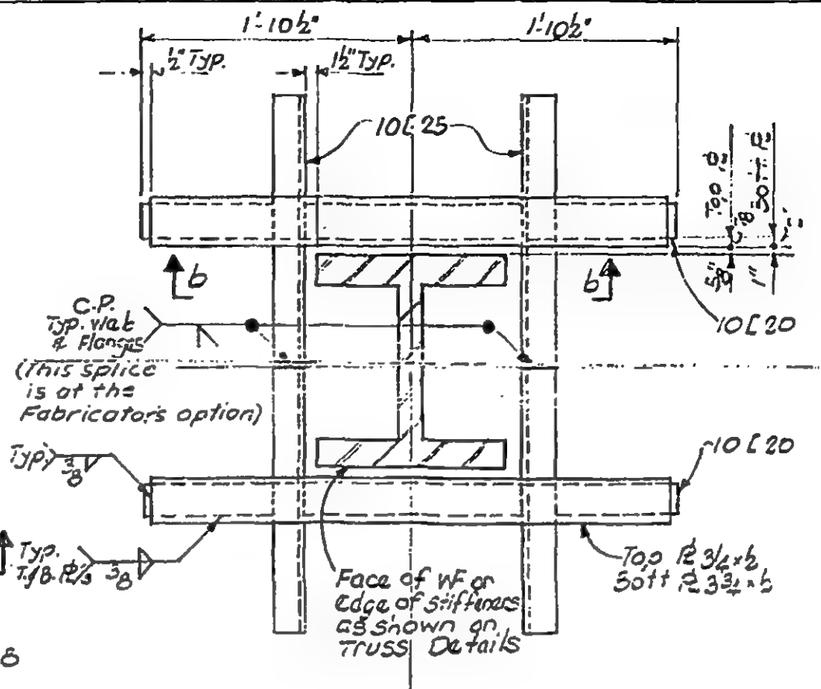

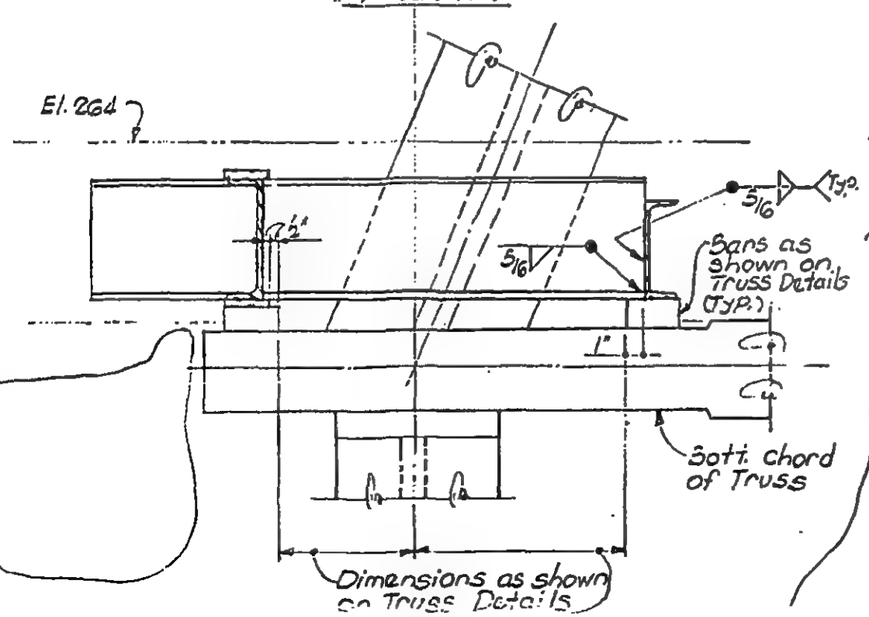

Section a-a
DETAIL-1
(All material Fy=50 KSi)

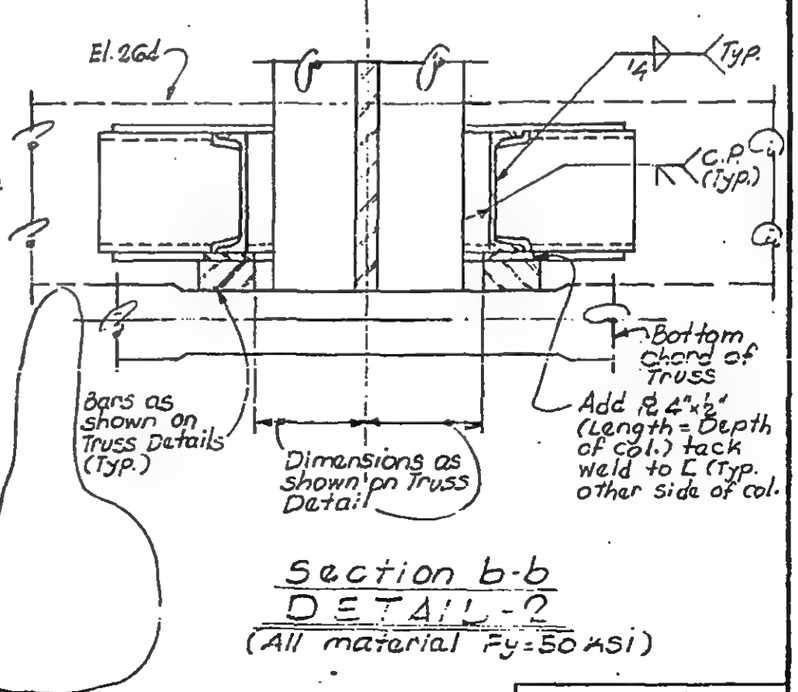

Section b-b
DETAIL-2
(All material Fy=50 KSi)

LICENSED PROFESSIONAL ENGINEER
LESLIE E. ROBERTSON
No. 34360
STATE OF NEW YORK

DRAWN
S.C.

REVIEWED
E.L.

10-JK4-9

SKILLING - HELLE - CHRISTIANSEN - ROBERTSON Structural & Civil Engineers

PROJECT: THE WORLD TRADE CENTER | TITLE: DETAIL OF COLUMN BOSOM PLS – TYPE A,B,C,D,E,F & G | DATE: 11-24-67

REVISIONS

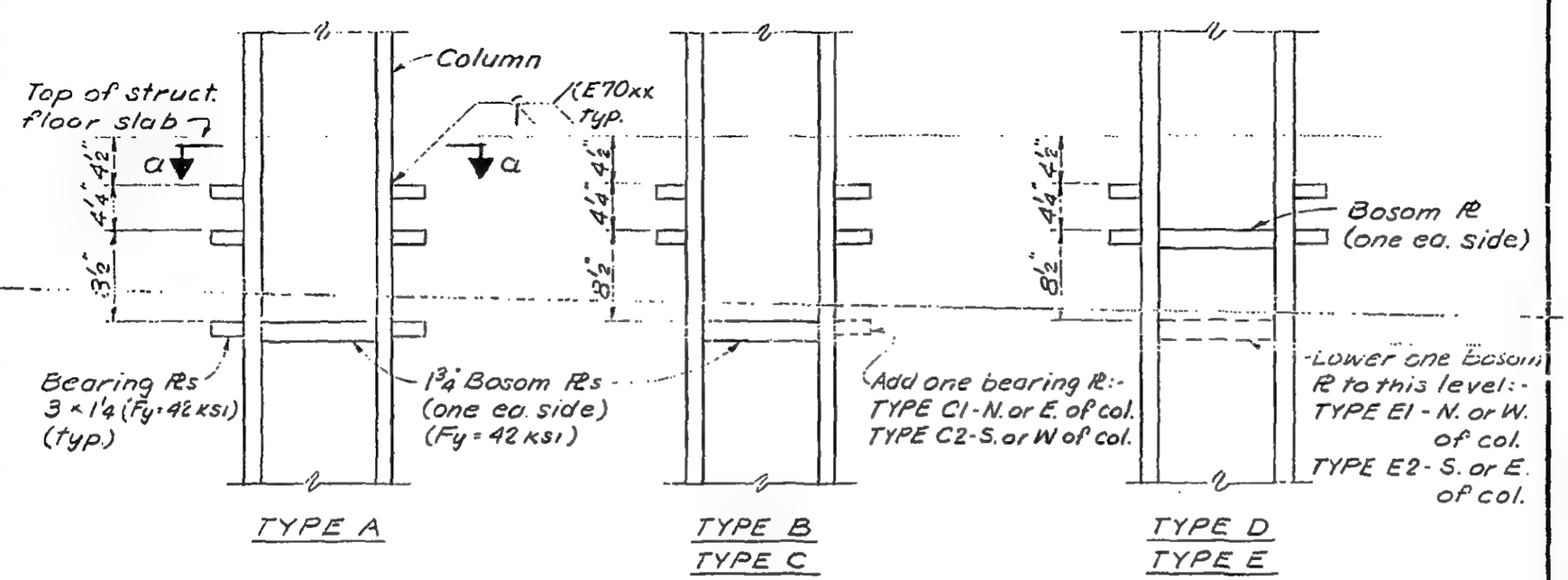

TYPE A

TYPE B
TYPE C

TYPE D
TYPE E

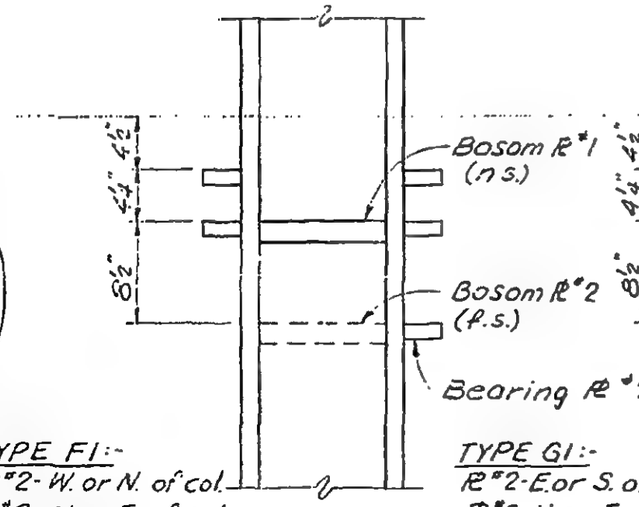

TYPE F1:-
PL #2 - W. or N. of col.
PL #3 - N. or E. of col.

TYPE F2:-
PL #2 - W. or N. of col.
PL #3 - S. or W. of col.

TYPE F

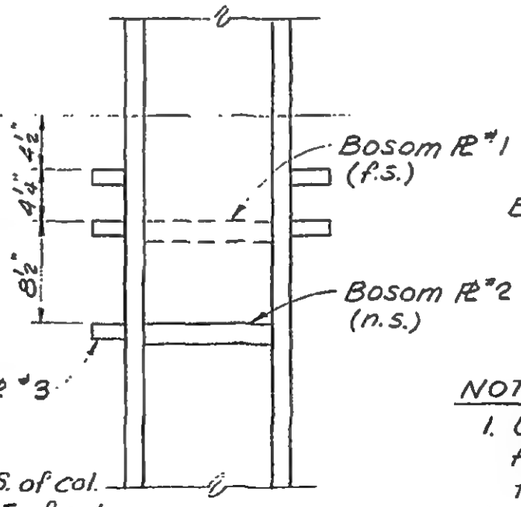

TYPE G1:-
PL #2 - E. or S. of col.
PL #3 - N. or E. of col.

TYPE G2:-
PL #2 - E. or S. of col.
PL #3 - S. or W. of col.

TYPE G

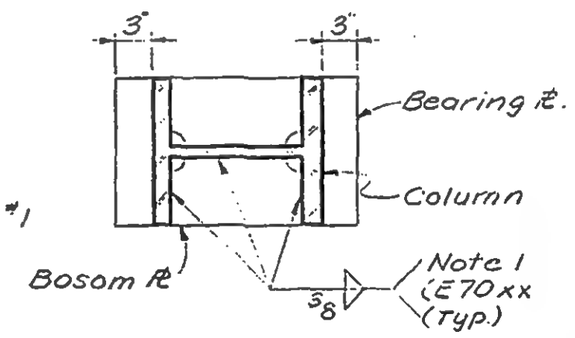

Section a-a

NOTES:

1. Use ½" weld on either column flanges or web when the thickness exceeds 2¼".
2. When a steel beam frames to the col. omit bearing PLs or bosom PL on the side the beam occurs.

10-JK4-10

LICENSED PROFESSIONAL ENGINEER
LESLIE E. ROBERTSON
No. 34360
UNIVERSITY OF THE STATE OF NEW YORK

SKILLING - HELLE - CHRISTIANSEN - ROBERTSON Structural & Civil Engineers

PROJECT THE WORLD TRADE CENTER | TITLE DETAIL OF COLUMN BOSOM R^s — TYPE H | DATE 2-9-68

REVISIONS

6-7-68

COLUMN No.	ELEVATION AT TOP OF PLATES																			
	NORTH					SOUTH					EAST					WEST				
	*1	*2	*3	*4	*5	*1	*2	*3	*4	*5	*1	*2	*3	*4	*5	*1	*2	*3	*4	*5
J5-1				292'-10½"					292'-10½"							293'-6"	292'-10½"			
				282'-10½"					282'-10½"							283'-6"	282'-10½"			
				272'-10½"					272'-10½"							273'-6"	272'-10½"			
J8-53				292'-10½"					292'-10½"							293'-5"	292'-10½"			
				282'-10½"					282'-10½"							283'-6"	282'-10½"			
				272'-10½"					272'-10½"							273'-6"	272'-10½"			
				251'-10½"					251'-10½"							252'-6"	251'-10½"			
J5-3				292'-10½"					292'-10½"		293'-6"	292'-10½"								
				282'-10½"					282'-10½"		283'-6"	282'-10½"								
				272'-10½"					272'-10½"		273'-6"	272'-10½"								
J8-54	293'-6"	292'-10½"				293'-6"	292'-10½"							292'-10½"						
	283'-6"	282'-10½"				283'-6"	282'-10½"							282'-10½"						
	273'-6"	272'-10½"				273'-6"	272'-10½"							272'-10½"						
	252'-6"	251'-10½"				252'-6"	251'-10½"							251'-10½"						
J4-16					248'-4"					248'-4"			248'-6"					248'-6"		
J5-14					248'-4"					248'-4"			248'-6"					248'-6"		
J5-17					248'-4"					248'-4"			248'-6"					248'-6"		
J6-13					248'-4"					248'-4"			248'-6"					248'-6"		

* See TYPE J for additional R^s when R.C. wall occurs.

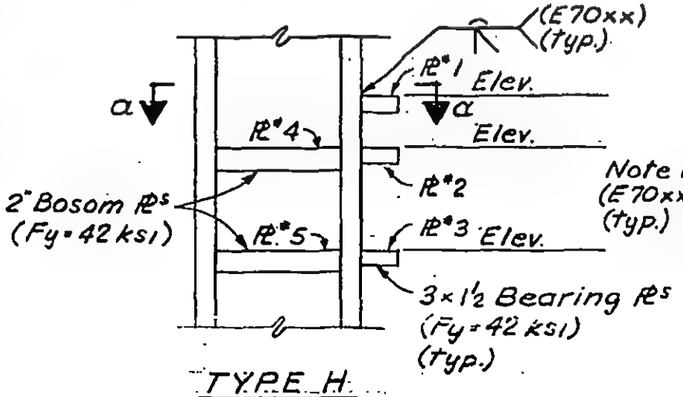

TYPE H

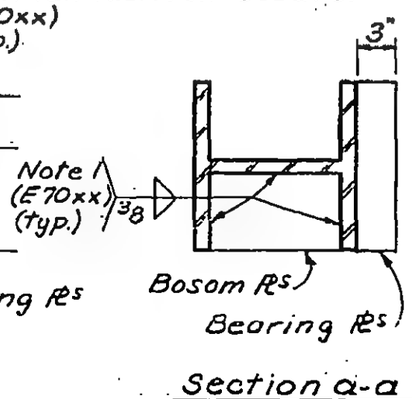

Section a-a

NOTE:-

1. Use ½" weld on either column flanges or web when the thickness exceeds 2¼".

LICENSED PROFESSIONAL ENGINEER LESLIE E. ROBERTSON No. 34360 UNIVERSITY OF THE STATE OF NEW YORK

10 JK4-10A

SKILLING - HELLE - CHRISTIANSEN - ROBERTSON Structural & Civil Engineers

PROJECT THE WORLD TRADE CENTER | TITLE DETAIL OF COLUMN BOSOM Rs — TYPE H | DATE 11-24-67

REVISIONS
2-16-68
5-1-68
6-7-68
12-3-68
2-4-69

COLUMN No.	ELEVATION AT TOP OF PLATES																			
	NORTH					SOUTH					EAST					WEST				
	#1	#2	#3	#4	#5	#1	#2	#3	#4	#5	#1	#2	#3	#4	#5	#1	#2	#3	#4	#5
J11-7	283'-6"	282'-11"	282'-2½"			283'-6"	282'-11"	282'-2½"						282'-11"	282'-2½"					282'-2½"
J11-8 *																			281'-1"	280'-1"
J11-9					279'-3"					279'-3"						280'-3"	279'-9"	279'-3"		
J13-5	283'-6"	282'-11"	282'-2½"												282'-2½"					282'-2½"
J13-6 *																				282'-2½"
J14-7				278'-6"	277'-4"					277'-4"										
K27-3				251'-6½"																
K31-10						283'-6"	283'-1"	282'-6½"												
K31-11										280'-7"	281'-3"		277'-7½"							
K31-12					278'-4"					278'-3"	279'-0"		277'-7½"			279'-0"		277'-7½"		
K35-10	283'-6"	283'-1"	282'-6½"			283'-6"	283'-1"								282'-6½"					
K35-11					280'-7"				280'-7"	277'-8"	281'-1"		280'-1"			281'-1"		280'-1"		
K35-12					278'-3"					277'-1"	279'-0"		277'-9"			279'-0"		277'-9"		
K35-53	296'-0"	294'-0"	293'-1"			296'-0"	294'-0"	293'-1"						296'-0"	294'-0" 293'-1"					
K35-54			300'-0"					300'-0"							300'-0"					300'-0"
K35-55		295'-0"	293'-0"				295'-0"	293'-0"												
K37-1					292'-9"								292'-11"					292'-11"		
K37-4	296'-0"	294'-0"	293'-1"			296'-0"	294'-0"	293'-1"						296'-0"	294'-0" 293'-1"					
K37-5			300'-0"					300'-0"							300'-0"					300'-0"
K37-6		295'-0"	293'-0"				295'-0"	293'-0"												
K37-10	283'-6"	283'-1"	282'-6½"												282'-6½"					282'-6½"

* See TYPE J for additional Rs when R.C. wall occurs.

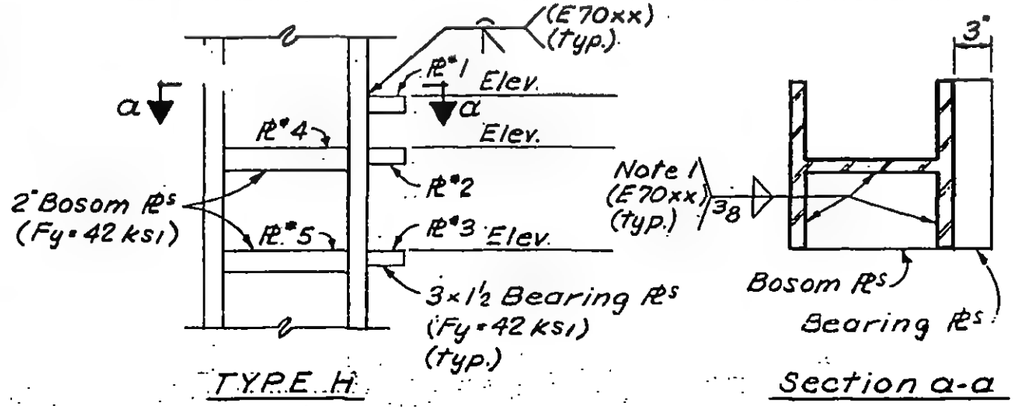

NOTE:-
1. Use ½" weld on either column flanges or web when the thickness exceeds 2¼".

LICENSED PROFESSIONAL ENGINEER LESLIE E. ROBERTSON No. 34360 UNIVERSITY OF THE STATE OF NEW YORK

DRAWN S.C.
REVIEWED E.L.

10-JK4-10B

SKILLING - HELLE - CHRISTIANSEN - ROBERTSON Structural & Civil Engineers

PROJECT THE WORLD TRADE CENTER | TITLE DETAIL OF COLUMN BOSOM Rs — TYPE H | DATE 9-20-68

REVISIONS
12-17-68
2-4-69
3-12-69

COLUMN No.	ELEVATION AT TOP OF PLATES																			
	NORTH					SOUTH					EAST					WEST				
	#1	#2	#3	#4	#5	#1	#2	#3	#4	#5	#1	#2	#3	#4	#5	#1	#2	#3	#4	#5
K38-2				278'-1"	277'-1"				278'-4"				278'-3½"					278'-3½"		
K40-1										248'-4"			248'-7½"							
K40-2					248'-4"					248'-4"			248'-7½"					248'-7½"		
K41-2					282'-9"					282'-9"			282'-11"							
K41-6		277'-0"	295'-0"				277'-0"	295'-0"												
K43-1		283'-3¾"	282'-7"				283'-3¾"	282'-7"												282'-6¾"
K43-2					282'-9"					282'-9"			282'-11"							
K43-52		283'-3¾" 273'-3¾"	282'-7" 272'-7"												282'-6¾" 272'-6¾"					282'-6¾" 272'-6¾"
K43-53	283'-6" 273'-6"	282'-10½" 272'-10½"													282'-10½" 272'-10½"					282'-10½" 272'-10½"
K44-3					272'-7"								272'-11"					272'-11"		
K45-1						283'-6" 273'-6"	282'-10½" 272'-10½"								282'-10½" 272'-10½"					282'-10½" 272'-10½"
K45-4	276'-0"	274'-9½"				276'-0"	274'-9½"								274'-8"					274'-8"
K45-5	278'-11½"	277'-8¾"				278'-11½"	277'-8¾"								277'-7¼"					277'-7¼"
K45-6	281'-9"	280'-6½"				281'-9"	280'-6½"								280'-5"					280'-5"
K47-51							283'-3¾" 273'-3¾"	282'-7" 272'-7"							282'-6¾" 272'-6¾"					282'-6¾" 272'-6¾"

* See TYPE J for additional Rs when R.C. wall occurs.

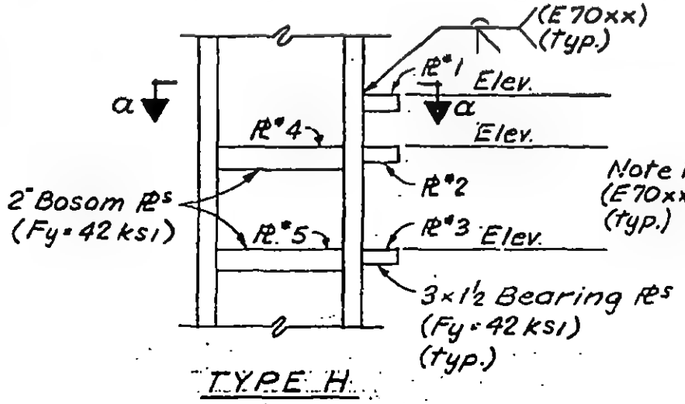

TYPE H

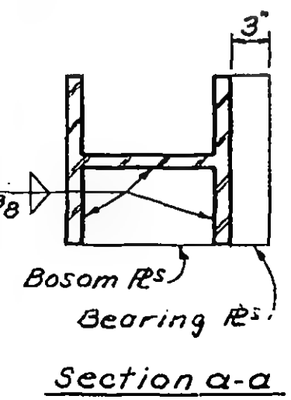

Section a-a

NOTE:
1. Use ½" weld on either column flanges or web when the thickness exceeds 2¼".

LICENSED PROFESSIONAL ENGINEER
LESLIE E. ROBERTSON
No. 34360
UNIVERSITY OF THE STATE OF NEW YORK

DRAWN S.C.
REVIEWED E.L.

70-JK4-10C

SKILLING - HELLE - CHRISTIANSEN - ROBERTSON Structural & Civil Enginoors

PROJECT THE WORLD TRADE CENTER | TITLE DETAIL OF COLUMN BOSOM Rs — TYPE H | DATE 3-12-69

REVISIONS

COLUMN No.	ELEVATION AT TOP OF PLATES																			
	NORTH					SOUTH					EAST					WEST				
	#1	#2	#3	#4	#5	#1	#2	#3	#4	#5	#1	#2	#3	#4	#5	#1	#2	#3	#4	#5
K51-55	327'-6" Int. Rs @4'-0" oc. 283'-6"					327'-6" Int. Rs @4'-0" oc. 283'-6"														
K53-54	327'-6" Int. Rs @4'-0" oc. 283'-6"					327'-6" Int. Rs @4'-0" oc. 283'-6"														
K53-55	327'-6" Int. Rs @4'-0" oc. 283'-6"					327'-6" Int. Rs @4'-0" oc. 283'-6"														
K53-56						327'-6" Int. Rs @4'-0" oc. 283'-6"														
K53-57	327'-6" Int. Rs @4'-0" oc. 283'-6"					327'-6" Int. Rs @4'-0" oc. 283'-6"														

* See TYPE J for additional Rs when R.C. wall occurs.

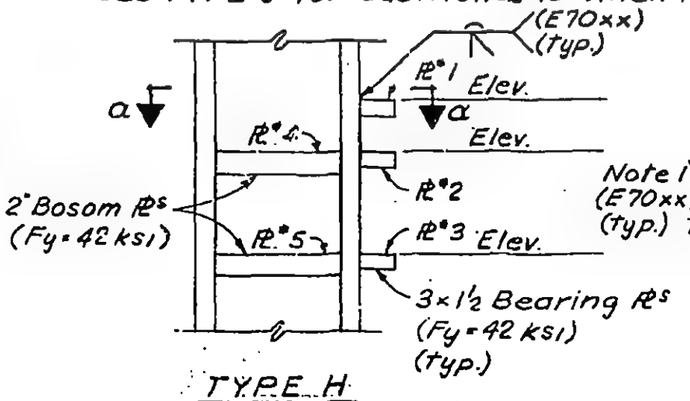

TYPE H

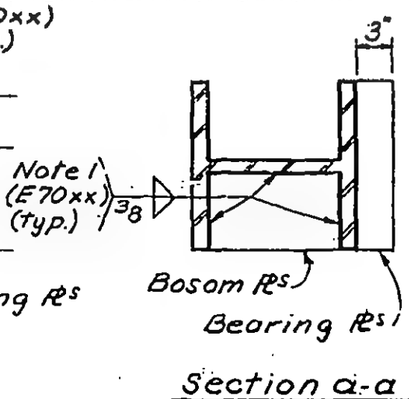

Section a-a

NOTE:-

1. Use ½" weld on either column flanges or web when the thickness exceeds 2¼".

LICENSED PROFESSIONAL ENGINEER LESLIE E. ROBERTSON No. 34360 UNIVERSITY OF THE STATE OF NEW YORK

DRAWN S.C.

REVIEWED E.L.

10-JK4-10D

SKILLING - HELLE - CHRISTIANSEN - ROBERTSON Structural & Civil Engineers

PROJECT THE WORLD TRADE CENTER | TITLE DETAIL OF COLUMN BOSOM Rs — TYPE H | DATE 5-1-68

REVISIONS

6-7-68

COLUMN No.	ELEVATION AT TOP OF PLATES																			
	NORTH					SOUTH					EAST					WEST				
	*1	*2	*3	*4	*5	*1	*2	*3	*4	*5	*1	*2	*3	*4	*5	*1	*2	*3	*4	*5
K70-4				278'-4"	277'-6"				278'-0"	276'-9"								277'-10"		
K70-5				278'-0"	276'-9"				278'-0"	276'-9"								277'-1"		
K70-6				278'-0"	276'-9"					278'-4"			278'-7½"					278'-7½"		
K70-7					278'-4"					278'-4"	278'-0"		277'-2½"							
K71-12					278'-4"					276'-11"						278'-0"		277'-2½"		
K71-13					276'-11"					276'-4"			276'-7½"					276'-7½"		

* See TYPE J for additional Rs when R.C. wall occurs.

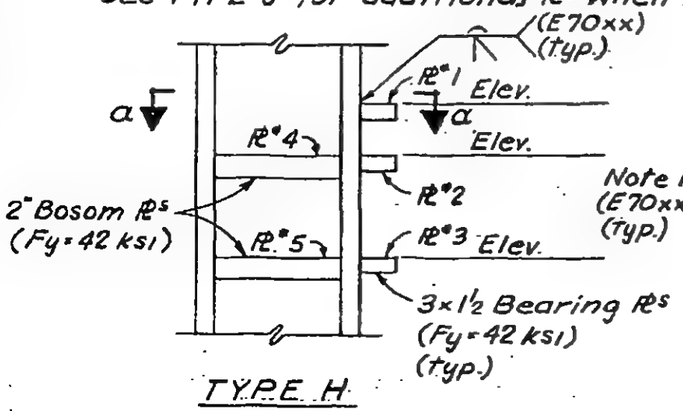

TYPE H

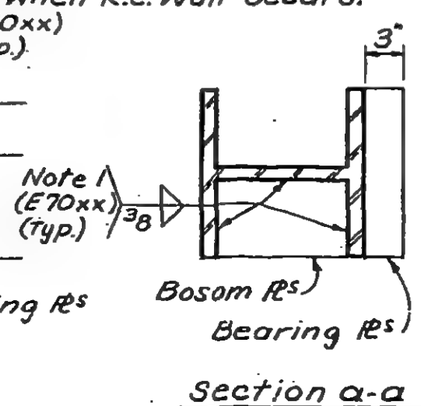

Section a-a

NOTE:-

1. Use ½" weld on either column flanges or web when the thickness exceeds 2¼".

LICENSED PROFESSIONAL ENGINEER
LESLIE E. ROBERTSON
No. 34360
IN THE STATE OF NEW YORK

10-JK4-10E

SKILLING - HELLE - CHRISTIANSEN - ROBERTSON Structural & Civil Engineers

PROJECT THE WORLD TRADE CENTER | TITLE DETAIL OF COLUMN BOSOM Rs — TYPE H | DATE 6-7-68

REVISIONS

9-4-68

COLUMN No.	ELEVATION AT TOP OF PLATES																			
	NORTH					SOUTH					EAST					WEST				
	#1	#2	#3	#4	#5	#1	#2	#3	#4	#5	#1	#2	#3	#4	#5	#1	#2	#3	#4	#5
J72-1			248'-6"					248'-6"							248'-4"					248'-4"
J72-2			248'-6"					248'-6"							248'-4"					248'-4"
J.72-4					248'-4"					248'-4"			248'-6"					248'-6"		
J72-6			248'-6"					248'-6"					248'-6"					248'-6"		
J72-7			↕					↕							248'-4"					248'-4"
J72-8			↕					↕							↕					↕
J72-9			↕					↕							↕					↕
J72-10			↕					↕							↕					↕
J72-11			↕					↕							↕					↕
J72-12			↕					↕							↕					↕
K72-13			248'-6"					248'-6"							248'-4"					248'-4"
K72-15					248'-4"					248'-4"			248'-6"					248'-6"		
K72-16					↕					↕			↕					↕		
K72-17					↕					↕			↕					↕		
K72-18					248'-4"					248'-4"			248'-6"					248'-6"		

* See TYPE J for additional Rs when R.C. wall occurs.

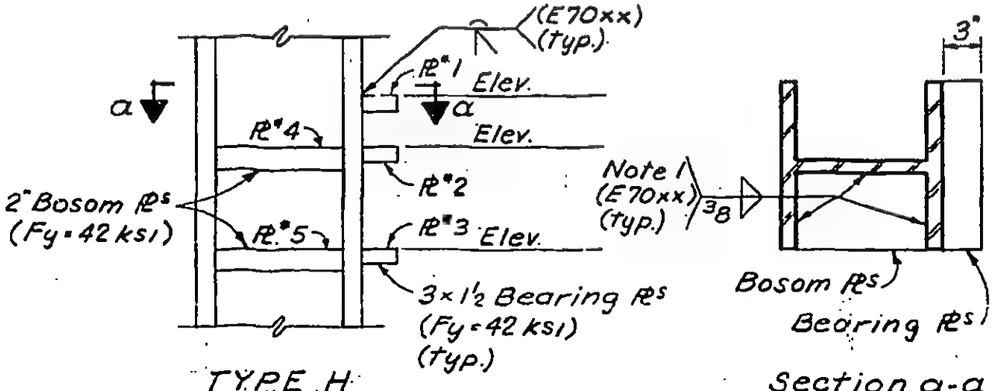

NOTE:-

1. Use ½" weld on either column flanges or web when the thickness exceeds 2¼".

LICENSED PROFESSIONAL ENGINEER LESLIE E. ROBERTSON No. 34260 UNIVERSITY OF THE STATE OF NEW YORK

70-JK4-10F

SKILLING - HELLE - CHRISTIANSEN - ROBERTSON Structural & Civil Engineers

PROJECT THE WORLD TRADE CENTER | TITLE DETAIL OF COLUMN BOSOM Rs — TYPE H | DATE 6-7-68

REVISIONS
9-1-68
3-30-70

COLUMN No.	ELEVATION AT TOP OF PLATES																			
	NORTH					SOUTH					EAST					WEST				
	#1	#2	#3	#4	#5	#1	#2	#3	#4	#5	#1	#2	#3	#4	#5	#1	#2	#3	#4	#5
J74-1					248'-4"					248'-4"			248'-6"					248'-6"		
J74-2					248'-4"					248'-4"			248'-6"					248'-6"		
J74-3					248'-4"					248'-4"			248'-6"					248'-6"		
J74-5			248'-6"					248'-6"					248'-6"					248'-6"		
J74-6			248'-6" 278'-4"		284'-6"			248'-6" 278'-4"			284'-6"				248'-4" 278'-4"					248'-4" 278'-4"
J74-7			248'-6"					248'-6"							248'-4"					248'-4"
J74-8			↕					↕							↕					↕
J74-9																				
J74-10																				
J74-11																				
K74-12			248'-6"					248'-6"							248'-4"					248'-4"
K74-13			278'-4"					278'-4"												
K74-14			248'-6"					248'-6"							248'-4"					248'-4"
K74-15			↕					↕							↕					↕
K74-16																				
K74-17			248'-6"					248'-6"							248'-4"					248'-4"
K74-18					248'-4"					248'-4"			248'-6"					248'-6"		
K74-19					248'-4"					248'-4"			248'-6"					248'-6"		

* See TYPE J for additional Rs when R.C. wall occurs.

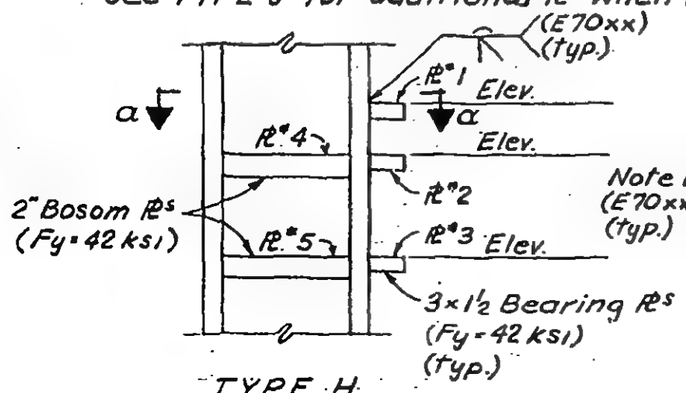

TYPE H

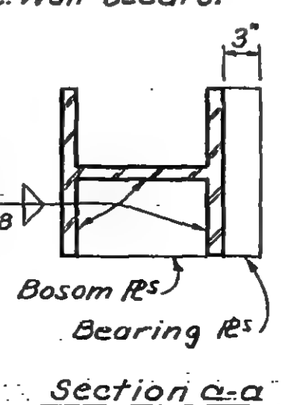

Section a-a

NOTE:-

1. Use ½" weld on either column flanges or web when the thickness exceeds 2¼".

LICENSED PROFESSIONAL ENGINEER
LESLIE E. ROBERTSON
No. 34360
UNIVERSITY OF THE STATE OF NEW YORK

DRAWN S.C.
REVIEWED E.L.

10-JK4-106

SKILLING - HELLE - CHRISTIANSEN - ROBERTSON Structural & Civil Engineers

PROJECT THE WORLD TRADE CENTER | TITLE DETAIL OF COLUMN BOSOM ℞s — TYPE H | DATE 4-18-69

REVISIONS

COLUMN No.	ELEVATION AT TOP OF PLATES																			
	NORTH					SOUTH					EAST					WEST				
	℞1	℞2	℞3	℞4	℞5	℞1	℞2	℞3	℞4	℞5	℞1	℞2	℞3	℞4	℞5	℞1	℞2	℞3	℞4	℞5
K92-3			282'-2½ 268'-2½					282'-2½ 268'-2½							282'-0 268'-0					282'-0 268'-0
K92-4			282'-2½					282'-2½							282'-0					282'-0
K92-5			282'-2½ 268'-2½					282'-2½ 268'-2½							282'-0 268'-0					282'-0 268'-0

* See TYPE J for additional ℞s when R.C. wall occurs.

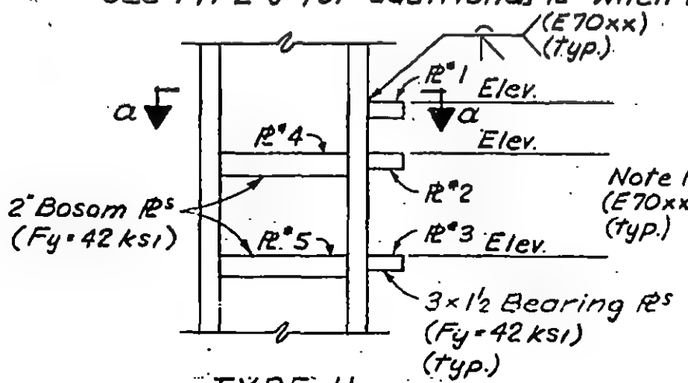

TYPE H

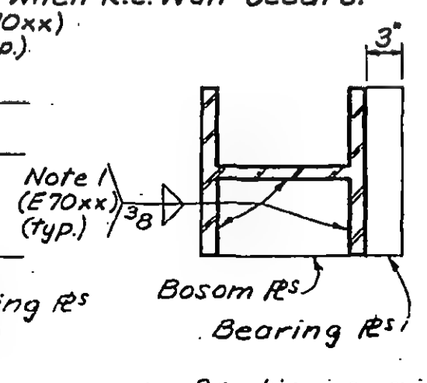

Section a-a

NOTE:-

1. Use ½" weld on either column flanges or web when the thickness exceeds 2¼".

DRAWN S.C.

REVIEWED E.L.

10-JK4-10H

LICENSED PROFESSIONAL ENGINEER LESLIE E. ROBERTSON No. 34360 UNIVERSITY OF THE STATE OF NEW YORK

SKILLING - HELLE - CHRISTIANSEN - ROBERTSON Structural & Civil Engineers

PROJECT THE WORLD TRADE CENTER | TITLE DETAIL OF COLUMN BOSOM ℄s — TYPE J | DATE 2-9-68

REVISIONS

5-1-68

COLUMN No.	ELEVATION OF PLATES							
	NORTH		SOUTH		EAST		WEST	
	TOP ℄	BOTT. ℄	TOP ℄	BOTT. ℄	TOP ℄	BOTT. ℄	TOP ℄	BOTT. ℄
J2-16	283'-8"	273'-1"	283'-8"	273'-1"				
J2-17					300'-0"	273'-1"	300'-0"	273'-1"
J3-13					293'-5"	282'-3"		
J3-57					293'-6"	282'-3"		
J4-13					293'-6"	282'-3"		
J5-7							304'-6"	290'-0"
J5-14					*293'-6"	*282'-3"		
J6-12					293'-6"	282'-3"		
J7-13					293'-6"	289'-6"		
J8-10					*293'-6"	*282'-3"		
J8-10					273'-2"	269'-0"		

* No intermediate ℄s Reqd.

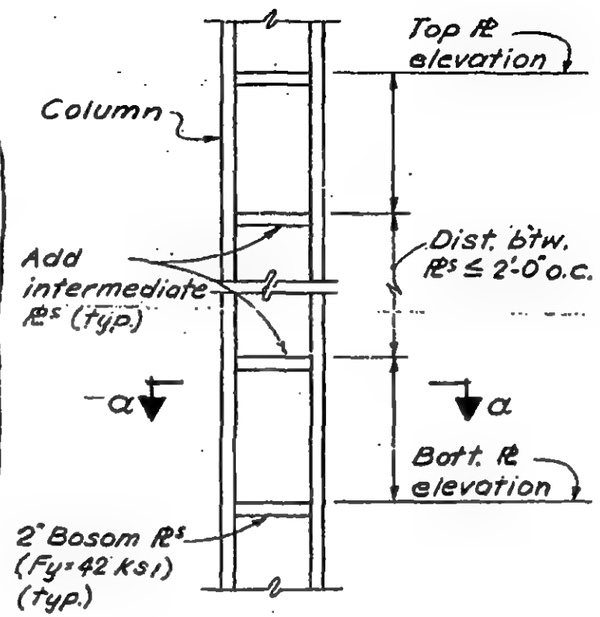

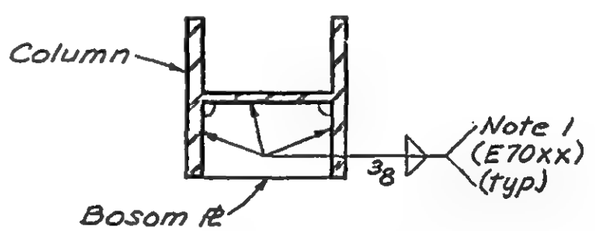

Section a-a

NOTE:-

1. Use ½" weld on either column flanges or web when the thickness exceeds 2¼".

LICENSED PROFESSIONAL ENGINEER LESLIE E. ROBERTSON No. 34360 UNIVERSITY OF THE STATE OF NEW YORK

10-JK4-11A

SKILLING - HELLE - CHRISTIANSEN - ROBERTSON Structural & Civil Engineers

PROJECT THE WORLD TRADE CENTER | TITLE DETAIL OF COLUMN BOSOM PLS — TYPE J | DATE 11-24-67

REVISIONS

6-7-68

COLUMN No.	ELEVATION OF PLATES							
	NORTH		SOUTH		EAST		WEST	
	TOP PL	BOTT. PL	TOP PL	BOTT. PL	TOP PL	BOTT. PL	TOP PL	BOTT. PL
J9-8					293'-6"	291'-6"		
J11-8					281'-1"	273'-2"		
J13-6					283'-2½"	273'-2"		
J14-1			301'-8"	292'-6¾"				
J14-3							303'-10"	295'-6"

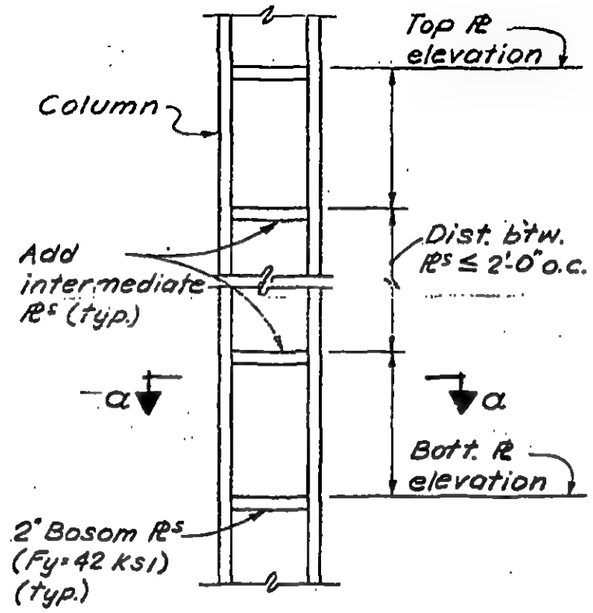

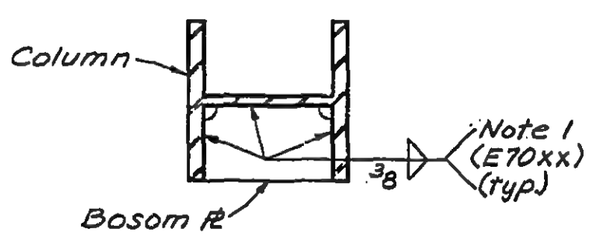

Section a-a

NOTE:-

1. Use ½" weld on either column flanges or web when the thickness exceeds 2¼".

LICENSED PROFESSIONAL ENGINEER LESLIE E. ROBERTSON No. 34360 STATE OF NEW YORK

10-JK4-12

SKILLING - HELLE - CHRISTIANSEN - ROBERTSON Structural & Civil Engineers

PROJECT THE WORLD TRADE CENTER | TITLE DETAIL OF COLUMN BOSOM Rs — TYPE J | DATE 6-7-68

REVISIONS
9-20-68
2-4-69

COLUMN No.	ELEVATION OF PLATES							
	NORTH		SOUTH		EAST		WEST	
	TOP R	BOTT. R	TOP R	BOTT. R	TOP R	BOTT. R	TOP R	BOTT. R
K29-4	282'-4"	268'-8"	282'-4"	268'-8"				
K31-11	282'-4"	278'-4"						
K31-12	293'-5"	289'-5"	293'-5"	289'-5"				
K35-53							304'-0"	293'-1"
K35-55					297'-0"	293'-0"	297'-0"	293'-0"
K37-4							304'-0"	293'-1"
K37-6					297'-0"	293'-0"	297'-0"	293'-0"
K38-1	283'-0"	277'-8"	283'-0"	277'-8"				
K40-1	293'-0"	278'-4"	293'-0"	278'-4"				
K41-6					297'-0"	295'-0"	297'-0"	295'-0"

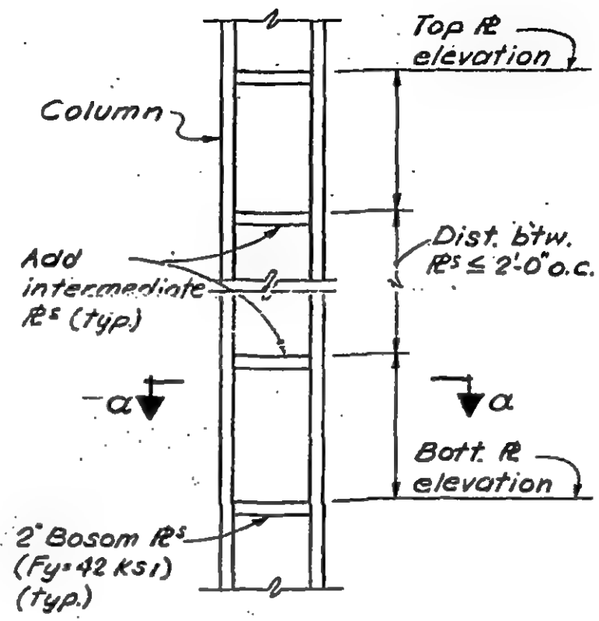

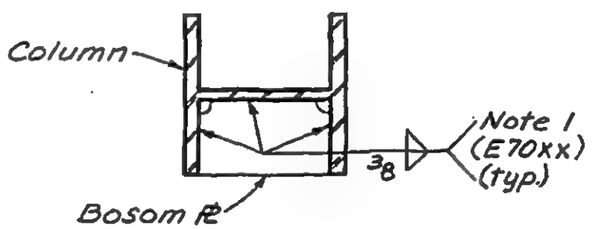

Section a-a

NOTE:-
1. Use ½" weld on either column flanges or web when the thickness exceeds 2¼".

LICENSED PROFESSIONAL ENGINEER · LESLIE E. ROBERTSON · NO. 31980 · UNIVERSITY OF THE STATE OF NEW YORK

DRAWN S.C.
REVIEWED E.L.

10-JK4-15

SKILLING - HELLE - CHRISTIANSEN - ROBERTSON Structural & Civil Engineers

PROJECT THE WORLD TRADE CENTER | TITLE DETAIL OF COLUMN BOSOM ℄s — TYPE J | DATE 3-12-69

REVISIONS

COLUMN No.	ELEVATION OF PLATES							
	NORTH		SOUTH		EAST		WEST	
	TOP ℄	BOTT. ℄	TOP ℄	BOTT. ℄	TOP ℄	BOTT. ℄	TOP ℄	BOTT. ℄
K47-53					331'-0"	293'-0"	331'-0"	293'-0"
K47-54	331'-0"	293'-0"	331'-0"	293'-0"				
K49-4					292'-9"	289'-0"	292'-9"	289'-0"
K49-54					331'-0"	293'-0"	331'-0"	293'-0"
K49-55	331'-0"	293'-0"	331'-0"	293'-0"				
K51-55					331'-0"	283'-0"	331'-0"	283'-0"
K53-54					331'-0"	283'-0"	331'-0"	283'-0"
K53-55					↕	↕	↕	↕
K53-56								
K53-57					331'-0"	283'-0"	331'-0"	283'-0"

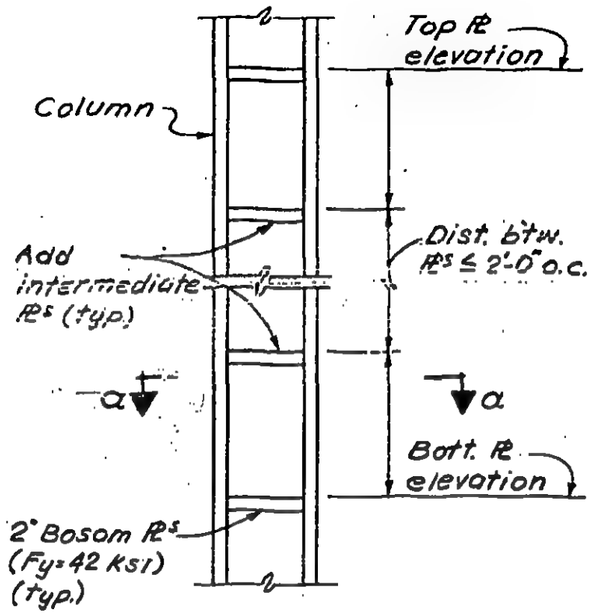

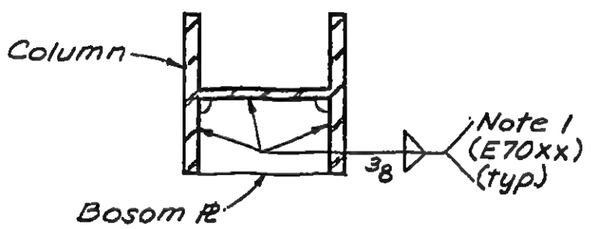

Section a-a

NOTE:-

1. Use ½" weld on either column flanges or web when the thickness exceeds 2¼".
2. Where beam occurs, the interrupted ℄ may be omitted.

LICENSED PROFESSIONAL ENGINEER LESLIE E. ROBERTSON No. 34360 UNIVERSITY OF THE STATE OF NEW YORK

DRAWN S.C.

REVIEWED E.L.

10-JK4-16

REVISIONS

SKILLING - HELLE - CHRISTIANSEN - ROBERTSON Structural & Civil Engineers

PROJECT THE WORLD TRADE CENTER | TITLE DETAIL OF COLUMN BOSOM PLs — TYPE J | DATE 6-11-68

COLUMN No.	ELEVATION OF PLATES							
	NORTH		SOUTH		EAST		WEST	
	TOP PL	BOTT. PL	TOP PL	BOTT. PL	TOP PL	BOTT. PL	TOP PL	BOTT. PL
K62-6					302'0"	296'-0"		

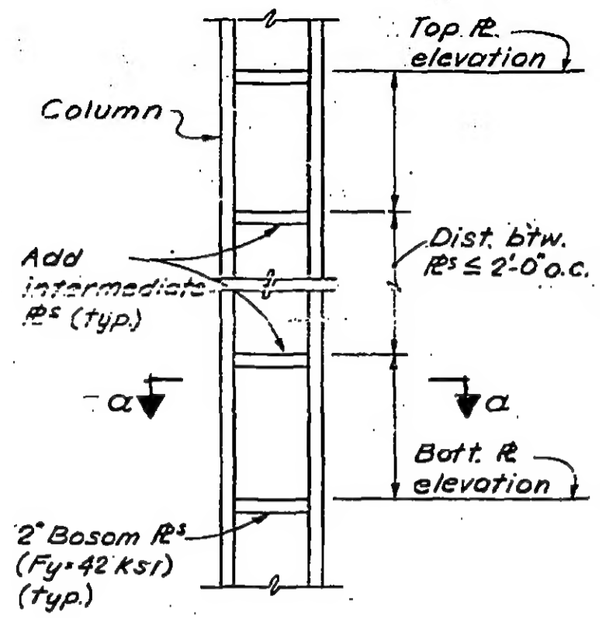

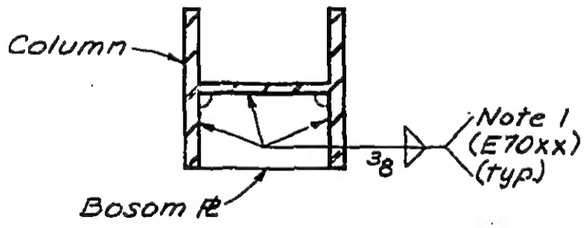

Section a-a

NOTE:-

1. Use 1/2" weld on either column flanges or web when the thickness exceeds 2 1/4".

LICENSED PROFESSIONAL ENGINEER LESLIE E. ROBERTSON No. 34360 UNIVERSITY OF THE STATE OF NEW YORK

10-JK4-29

SKILLING - HELLE - CHRISTIANSEN - ROBERTSON Structural & Civil Engineers

PROJECT THE WORLD TRADE CENTER | TITLE DETAIL OF COLUMN BOSOM ℄s — TYPE J | DATE 5-1-68

REVISIONS
6-7-68
12-17-68

COLUMN No.	ELEVATION OF PLATES							
	NORTH		SOUTH		EAST		WEST	
	TOP ℄	BOTT. ℄	TOP ℄	BOTT. ℄	TOP ℄	BOTT. ℄	TOP ℄	BOTT. ℄
J72-4	279'-0"	273'-1"						
J73-4	*276'-0"	*273'-1"						
K75-23	282'-0"	273'-3"						

* No Intermediate ℄'s are reqd.

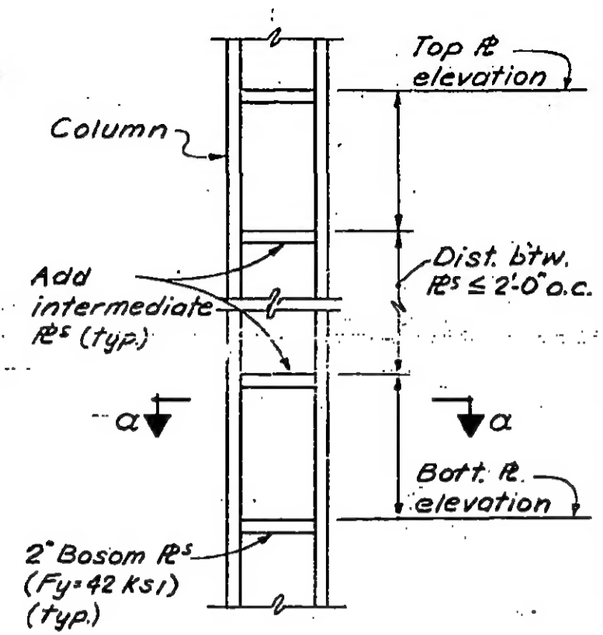

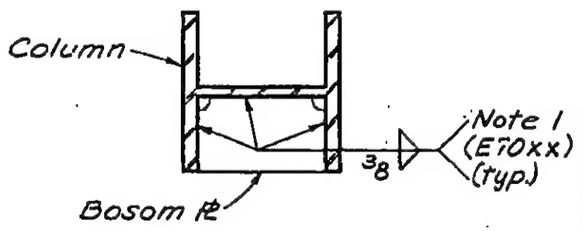

Section a-a

NOTE:-
1. Use ½" weld on either column flanges or web when the thickness exceeds 2¼".

LICENSED PROFESSIONAL ENGINEER — LESLIE E. ROBERTSON — No. 34360 — THE STATE OF NEW YORK

10-JK4-30

SKILLING, HELLE, CHRISTIANSEN, ROBERTSON — Structural & Civil Engineers

PROJECT: THE WORLD TRADE CENTER | TITLE: DETAIL FOR NEW COLUMNS IN HOTEL AREA | DATE: 12-23-71

REVISIONS

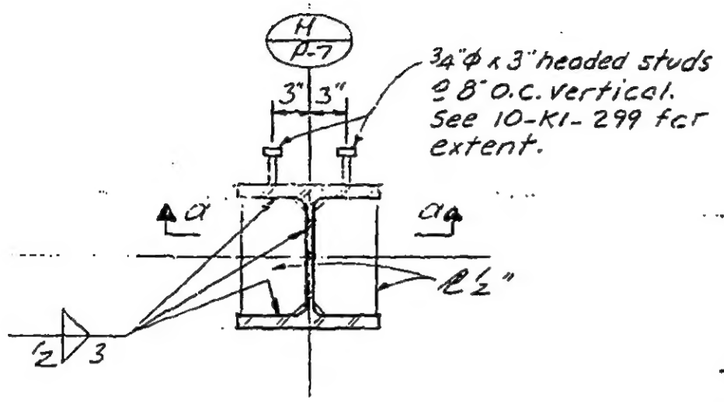

Section A-A

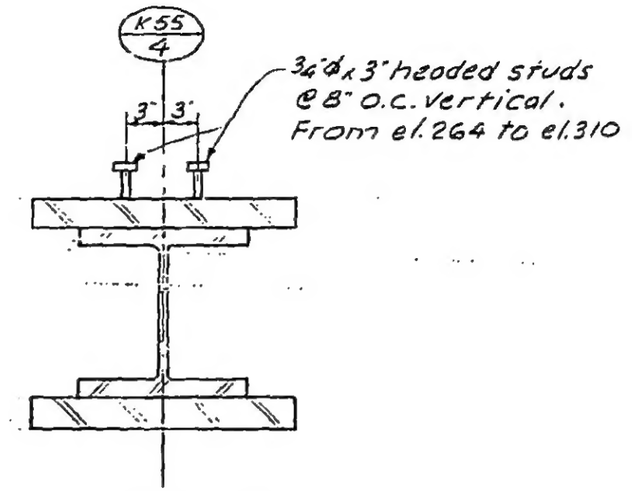

Detail B

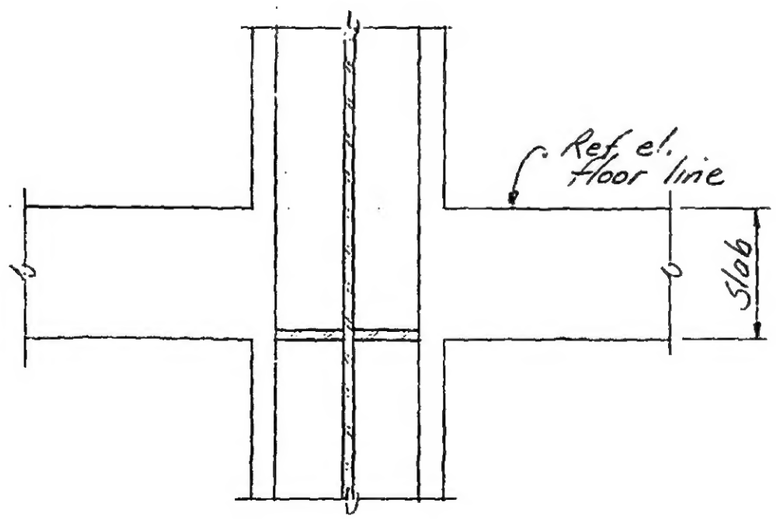

Section a-a

LICENSED PROFESSIONAL ENGINEER
LESLIE E. ROBERTSON
No 34360
UNIVERSITY OF THE STATE OF NEW YORK

DESIGNED: K. Chiang

DRAWN:

REVIEWED:

10-JKS-2

1040-L, 3